الاتصالات السعودية
SAUDI TELECOM

SAUDI TELECOM COMPANY

Reference Offer for Data Access (RODA)

Annex G

Service Schedules

Version number:	1.0
Version date:	August, 2007
Date of original Issue:	26th August 2007
Authority for issue:	GM, Regulatory Affairs

DOCUMENT HISTORY & VERSION CONTROL RECORD

Name of document	Primary Document
Author	Director, Carrier Services, yakeel@stc.com.sa
Authorised Officer	GM, Regulatory Affairs
Description of document	Contains the Service Schedules of the various RODA Services provided by STC, giving the definition, detailed description and terms of service etc.
Approved by	CITC, Decision No.178/1428
Date of approval	August, 2007

LIST OF SCHEDULES

Schedule[1] Bit Stream Service

Schedule [1.1] Wholesale Bit Stream Service

Schedule [1.2] Bit Stream Access Link Service

Schedule[2[Line Sharing Service

Schedule [2.1] Local Loop Sharing Service for Line Sharing

Schedule [2.2] ADSL DSLAM Site Sharing Service for Line Sharing

Schedule [2.3] Wholesale Backhaul for Line Sharing Service

SAUDI TELECOM COMPANY

Reference Offer for Data Access (RODA)

Annex G, Schedule 1

BITSTREAM SERVICE

SAUDI TELECOM COMPANY

Reference Offer for Data Access (RODA)

Annex G, Schedule 1.1

WHOLESALE BIT STREAM SERVICE

SCHEDULE [1] BIT STREAM SERVICE

SCHEDULE [1.1] WHOLESALE BIT STREAM SERVICE

1. General

1.1 STC will supply the Wholesale Bit Stream Service to the Other Licensed Operator in respect of the Services for which the process in Clause 4 of the this Schedule [1.1] has been followed.

1.2 For the avoidance of doubt, the Other Licensed Operator must initiate the process in Clause 4 of this Schedule [1.1] if it wishes to acquire the Wholesale Bit Stream Services not previously covered by a request made under that Clause.

1.3 STC will only be required to provide the Wholesale Bit Stream Service to the Other Licensed Operator to the extent that the Other Licensed Operator has complied with provisions of the RODA Primary Document.

2. Service Definition

Service	***Definition***
Wholesale Bit Stream Service	Wholesale Bit Stream service is a broadband access wholesale product, which utilizes STC equipped ADSL technology in the local loops, and which is backhaul transported across the STC Data network to Points at Edge Switches/Routers from which Bitstream Access Link provides the Wholesale ADSL capacity data service to OLOs licensed to provide the Data Services.

3. Service Description

3.1 The Wholesale Bit Stream Service is comprised of the following two parts, as depicted in Figure1 below:

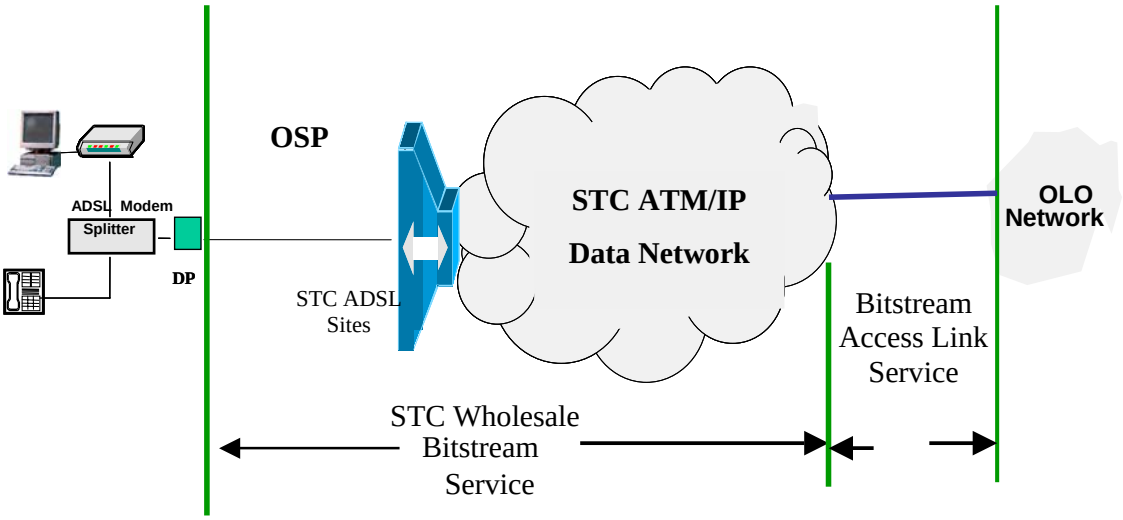

Figure 1: STC Bit Stream Service

3.2 **Out Side Plant (OSP) Access**: refers to the arrangement where STC installs equipment for high-speed access links to the Subscriber's premises (e.g. DSLAM) and makes these access links available to OLOs, to enable them to provide high-speed data services to existing applicable STC PSTN Subscribers. The Wholesale Bit Stream Service allows existing STC voice service and an OLO Data Service to be integrated over the same 2-wire copper pair. The copper pairs available for the STC Bit Stream Service are the PSTN copper lines currently in active service within the defined ADSL Serving Sites. The suitability of individual copper pairs to support the ADSL is determined by a line test that is performed by STC.

3.2.1 Network conditioning is the term used to describe any additional work that STC may have to carry out to provide the requested service, such as to make copper loops suitable for use in providing Bitstream or Shared Access Services. This work will involve major activities required to support the transmission systems of DSL technologies such as making an undertaking of a solution to replace a "Pair-Gain" systems or microwave links. However, if such network conditioning was not already included in STC network plans, STC will charge for the additional work or, in exceptional circumstances, decline to provide the service. Charges will be as detailed in Annex F – Price List .

3.3 **STC Data Network Cloud:** will carry the ADSL traffic over virtual circuits from the DSLAMs and RAN's throughout the Kingdom over the ATM/IP Data network to Edge switches and/or Routers to which the OLO's are connected through Bit Stream Access Links.

3.4 STC has designed and implemented a flexible, efficient and well structured network architecture that not only achieves coverage of hundreds of ADSL Serving Sites in the most populated areas across the Kingdom, but also enables centralized control and administration functions to provide effective configuration, provisioning and fault management.

3.5 Connections to all of the nominated Edge Switch/Routers in Riyadh, Jeddah and Dammam as provided in attachment-2 of Annex H (*Operations and Maintenance Manual*) provides access to all of STC's ADSL Serving Sites. However, where an OLO provides services in only one of the above cities, the OLO can choose to connect to only one edge switch/router which is closest to that city. Where an OLO provides services in two of the above cities, the OLO is required to connect to two edge switches/routers closest to those cities. Where an OLO provides services in three or more cities, the OLO is required to connect to all three nominated edge switches/routers named above.

3.6 The OLO will be responsible for obtaining and managing an IP address pool that allows individual IP addresses to be assigned to different users.

3.7 The STC Wholesale Bit Stream Service includes the backhaul from the DSLAMs/RANs to the edge Switches/Routers. The OLO shall take the traffic from the Edge Switches to its premises by using the Bit Stream Access Link Service offered by STC under Schedule [1.2] of this Annex.

3.8 It is the responsibility of the OLO to provide and configure the router at their premises.

Bit Stream Service Profile Offerings

The STC Bit Stream Service will consist of the products listed in Table 1.

Table 1 DSL Service Types

Service Types	Speed	
	Downstream	**Upstream**
A	256 kbit/s	128 kbit/s
B	512 kbit/s	128 kbit/s
C	1 Mbit/s	128 kbit/s

Notes:

- STC will endeavour to offer a contention ratio falling not below 40:1 that aligns with that offered by STC in its retail broadband products.
- STC will provide higher Downstream speeds of the Bit Stream Service that will align with those offered by STC in its retail broadband products.
- STC will consult and liaise with OLOs to review requirements for increases in data transmission speeds and will provide at least 2 months notice of proposals to introduce or withdraw data transmission speeds.
- ADSL modems and planning limits are based on ADSL CPE specifications given in Annex C (*Technical*).
- The Line Testing System (LTS), based on the cable used and the actual distance from the Subscriber to the ADSL Exchange Equipment, will determine the actual speed that can be offered on each individual line.

4. Service Provisioning

4.1 This Clause 4 applies where the Other Licensed Operator wishes to use the Wholesale Bit Stream Service provided by STC in respect of which the process in this Clause 4 has not already been undertaken.

4.2 The Other Licensed Operator shall notify STC by means of the request form set out in Annex H (*Operations and Maintenance Manual*) if it requests the use of the Wholesale Bit Stream Service.

4.3 The initial order shall be no less than 30,000 lines to be activated over a year (7,500 target activation per quarter). The Bit Stream Service is to be ordered in multiples of 1,000.

4.4 STC shall acknowledge, in writing, receipt of the Other Licensed Operator's request under Clause 4.2 within five (5) Business Days of its receipt.

4.5 Following receipt of a request under Clause 4.2, STC shall assess that request and notify the Other Licensed Operator within ten (10) Business Days that either:

a. The implementation of the request in respect of the requested Wholesale Bit Stream Service involves only network conditioning in STC's Network, in which case the negotiation period shall be thirty (30) Business Days; or

b. The implementation of the request in respect of the requested Wholesale Bit Stream Service involves work additional to or as an alternative to network conditioning in STC's Network, in which case the negotiation period shall be sixty (60) Business Days, or

c. Facilities are unavailable.

4.6 The Parties shall forthwith negotiate in good faith the requirements, implementation charges and timetable for the use of the Wholesale Bit Stream Service provided by STC in accordance with the Other Licensed Operator's request under Clause 4.2 for the negotiation period specified in Clause 4.4 (a) and (b) failing which either Party

may commence the Dispute Resolution Procedure as defined in Clause 14 of the Primary Document.

4.7 Where the Parties have reached an agreement, in accordance with 4.4 (a) and (b) above, STC will commence implementation in accordance with the agreed timetable.

4.8 Nothing in this Clause 4 requires STC to perform any changes in its Network or to commence the supply of the Wholesale Bit Stream Service until the Parties have completed the preparation for that Wholesale Bit Stream Service and all network conditioning Charges as detailed in Clause 3.2.1 of Schedule 1.1 of this document have been agreed to by the Other Licensed Operator.

4.9 The Other Licensed Operator may, at any time, request STC to cease supplying the Wholesale Bit Stream Service and STC shall cease supplying the Wholesale Bit Stream Service as soon as practicable or at such time as specified by the Other Licensed Operator in accordance with terms and conditions specified in Clause 15 (Breach, Suspension and Termination) of the Primary Document.

5. Forecasts

5.1 Forecasts for the Wholesale Bit Stream Service shall be submitted to STC according to the procedures detailed in Annex E *(Forecasting).*

6. Charging

6.1 Charges for the Wholesale Bit Stream Service shall be those published in Annex F *(Price List).*

6.2 The connection charges for the Wholesale Bit Stream Service shall be paid on the date of hand over of service. .

6.3 The rental charges for newly connected Wholesale Bit Stream Service shall be paid on a Quarterly basis in advance at the beginning of each Quarter. Rental will be payable for all the lines which were activated or ordered during the previous

Quarters. For the first year, the OLO is required to meet the quarterly target activation. A minimum rental of 70% will be payable based on this target.

7. Billing

7.1 STC shall use its reasonable endeavours to provide Billing Information for the Wholesale Bit Stream Service in accordance with the format set out in Annex B (*Billing Processes and Procedures*) within thirty (30) Business Days from the end of each Billing Period, together with the invoice for the Wholesale Bit Stream Service.

7.2 In addition to the obligation in this Clause 7.1, when there is a dispute in relation to invoices issued for the Wholesale Bit Stream Service, the parties shall exchange the appropriate Billing Information.

7.3 In the event that STC cannot provide the appropriate Billing Information for the Wholesale Bit Stream Service due to a system error or other faults the Other Licensed Operator shall be requested to provide appropriate Billing Information to STC in accordance with the procedure set out in Annex B (*Billing Processes and Procedures*).

7.4 Where the Billing Information collected by the Other Licensed Operator is not available under this Clause 7.3, the Parties shall negotiate in good faith alternative Billing arrangements.

SAUDI TELECOM COMPANY

Reference Offer for Data Access (RODA)

Annex G, Schedule 1.2

BIT STREAM ACCESS LINK SERVICE

SCHEDULE [1.2] BIT STREAM ACCESS LINK SERVICE

1. General

1.1 STC will supply the Bit Stream Access Link Service to the Other Licensed Operator in accordance with Clause 3 of the Primary Document in respect of the Services for which the process in Clause 4 of the this Schedule [1.2] has been followed.

1.2 For the avoidance of doubt, the process in Clause 4 of this Schedule [1.2] must be initiated by the Other Licensed Operator if it wishes to acquire the Bit Stream Access Link Service not previously covered by a request made under this Clause 4.

1.3 Notwithstanding the connection of STC's Network and the Other Licensed Operator's network, STC shall have no obligation to provide services other than those specified for the provision of the Bit Stream Access Link Service within standard delivery lead-times where appropriate, (extended lead-times where plant is not available) and subject to standard engineering and commercial principles.

1.4 STC will only be required to provide the Bit Stream Access Link Service to the Other Licensed Operator to the extent that the Other Licensed Operator has complied with Annex H (*Operations and Maintenance Manual*) and this Schedule [1.2].

2. Service Definition

Service	*Definition*
Bit Stream Access Link Service	A service where STC provides Wholesale Bit Stream Transmission capacity from the STC Edge Switch and/or Router to the premises of the Other Licensed Operator. (The Bit Stream Access Link Service shall only be provided to the sites of OLOs licensed to provide the Data Services in KSA) .

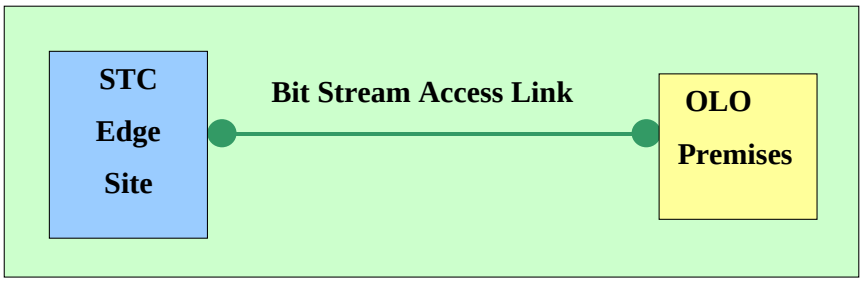

Figure 1: Bit Stream Access Link Service from STC Edge site to OLO site

3. Description of Service

3.1 Subject to the provisions of this Schedule, STC shall provide the Bit Stream Access Link Service between the Edge Switch/Router site at the Edge connecting to the OLO premises as shown in Figure 1 above.

3.2 STC shall provide the Bit Stream Access Link Service to the Other Licensed Operator for the contracted period and at the same standard and quality of service as it provides for similar circuits.

3.3 The Parties shall agree in advance all the necessary technical requirements, including physical circuit installation and operation for the provision of the Bits Stream Access Link Service pursuant to this Schedule [1.2].

3.4 Each Party shall locate and correct faults that occur in its Network which affect the performance of the Bit Stream Access Link Service in accordance with each Party's normal engineering practices. For the avoidance of doubt, neither Party warrants that its Network is, or will be, free from faults.

3.5 The provision of the Bit Stream Access Link Service shall be in accordance with the STC Transmission interface standards specified in Annex C.

3.6 The Bit Stream Access Link Service will be provided using fibre optic interface.

3.7 For the provision of each Bit Stream Access Link Service, the Other Licensed Operator shall pay STC charges in accordance with the rates for such circuits as specified from time to time in Annex F *(Price List)*.

4. Service Provisioning – Initial Procedure

4.1 This Clause 4 applies where the Other Licensed Operator wishes to use the Bit Stream Access Link Service provided by STC in respect of which the process in this Clause 4 has not already been undertaken.

4.2 The Other Licensed Operator shall notify STC by means of the request form set out in Annex H (*Operations and Maintenance Manual*) if it requests the use of a Bit Stream Access Link Service.

4.3 STC shall acknowledge, in writing, receipt of the Other Licensed Operator's request under Clause 4.2 within five (5) Business Days of its receipt.

4.4 Following receipt of a request under Clause 4.2, STC shall assess that request and notify the Other Licensed Operator within ten (10) Business Days that either:

a. The implementation of the request in respect of the requested Bit Stream Access Link Service involves only network conditioning in STC's Network, in which case the negotiation period shall be thirty (30) Business Days; or

b. The implementation of the request in respect of the requested Bit Stream Access Link Service involves work additional to or as an alternative to network conditioning in STC's Network, in which case the negotiation period shall be sixty (60) Business Days, or

c. Facilities are unavailable.

4.5 The Parties shall forthwith negotiate in good faith the requirements, implementation charges and timetable for the use of the Bit Stream Access Link Service provided by STC in accordance with the Other Licensed Operator's request under Clause 4.2 for the negotiation period specified in Clause 4.4 (a) and (b) failing which either Party may commence the Dispute Resolution Procedure as defined in Clause 14 of the Primary Document.

4.6 Where the Parties have reached an agreement, in accordance with 4.4 (a) and (b) above, STC will commence implementation in accordance with the agreed timetable.

4.7 Nothing in this Clause 4 requires STC to perform any changes in its Network or to commence the supply of the Bit Stream Access Link Service until the Parties have completed the preparation for that Bit Stream Access Link Service and all network conditioning Charges have been agreed to by the Other Licensed Operator.

4.8 The Other Licensed Operator may, at any time, request STC to cease supplying the Bit Stream Access Link Service and STC shall cease supplying the Bit Stream Access Link Service as soon as practicable or at such time as specified by the Other Licensed Operator in accordance with terms and conditions specified in Clause 15 (Breach, Suspension and Termination) of the Primary Document.

5. Charging

5.1 For all Bit Stream Access Link Services provided by STC, STC will collect the Bit Stream Access Link Service charges from the Other Licensed Operator.

5.2 STC shall, for those circuits for which it is providing a Bit Stream Access Link Service, collate a record for each individual circuit which shall be used by STC to invoice for the Bit Stream Access Link Service it provides under this RODA.

5.3 The calculation of Charges for the Bit Stream Access Link Service will be based on the applicable rates set out in Annex F *(Price List)*.

5.4 Charging commences upon the formal completion of the handover of each circuit.

6. Billing Information

6.1 STC shall use its reasonable endeavours to provide Billing Information for the Bit Stream Access Link Service in accordance with the format set out in Annex B (*Billing Processes and Procedures*) within thirty (30) Business Days from the end of each Billing Period, together with the invoice for the Bit Stream Access Link Service.

6.2 In addition to the obligation in this Clause 6.1, when there is a dispute in relation to invoices issued for the Bit Stream Access Link Service, the parties shall exchange the appropriate Billing Information.

6.3 In the event that STC cannot provide the appropriate Billing Information for the Bit Stream Access Link Service due to a system error or other faults the Other Licensed Operator shall be requested to provide appropriate Billing Information to STC in accordance with the procedure set out in Annex B (*Billing Processes and Procedures*).

6.4 Where the Billing Information collected by the Other Licensed Operator is not available under this Clause 6.3, the Parties shall negotiate in good faith alternative Billing arrangements.

SAUDI TELECOM COMPANY

Reference Offer for Data Access (RODA)

Annex G, Schedule 2

LINE SHARING SERVICE

SAUDI TELECOM COMPANY

Reference Offer for Data Access (RODA)

Annex G, Schedule 2.1

LOCAL LOOP SHARING SERVICE

FOR LINE SHARING

SCHEDULE [2] LINE SHARING SERVICE

Schedule [2.1] Local Loop Sharing Service for Line Sharing

1. General

1.1 STC will supply the Local Loop Sharing Service to the Other Licensed Operator in respect of the Services for which the process in Clause 4 of the this Schedule [2.1] has been followed.

1.2 For the avoidance of doubt, the Other Licensed Operator must initiate the process in Clause 4 of this Schedule [2.1] if it wishes to acquire the Local Loop Sharing Service not previously covered by a request made under that Clause.

1.3 STC will only be required to provide the Local Loop Sharing Service to the Other Licensed Operator to the extent that the Other Licensed Operator has complied with provisions of the RODA Primary Document.

2. Service definition

Local Loop Sharing Service	*Definition*
Local Loop Sharing Service	Local Loop Sharing Service is a service which provides the OLOs with access to the non voice higher frequency spectrum of the local loop (copper pairs) over which analogue telephone service is being provided to the end users by STC, allowing the OLOs to deploy Asymmetrical Digital Subscriber Line (ADSL) technology over the same copper pair using the OLO's own equipment.

3. Service Description

3.1 The Local Loop Sharing Service allows the voice service provided by STC and the asymmetrical digital subscriber line (ADSL) service offered by an OLO to be integrated over the same two wire metallic path (Local Loop). The Local Loop Sharing Service or 'Shared Access to the Local Loop' provides access to the non voice frequency spectrum of a metallic path over which analogue telephone service is being provided to the end user by STC, allowing an OLO to deploy the asymmetrical digital subscriber line (ADSL) over the same metallic pair or local loop. The general configuration of Shared Use of Copper Loop Using Splitters to offer the Line Sharing Service is shown in Figure1.

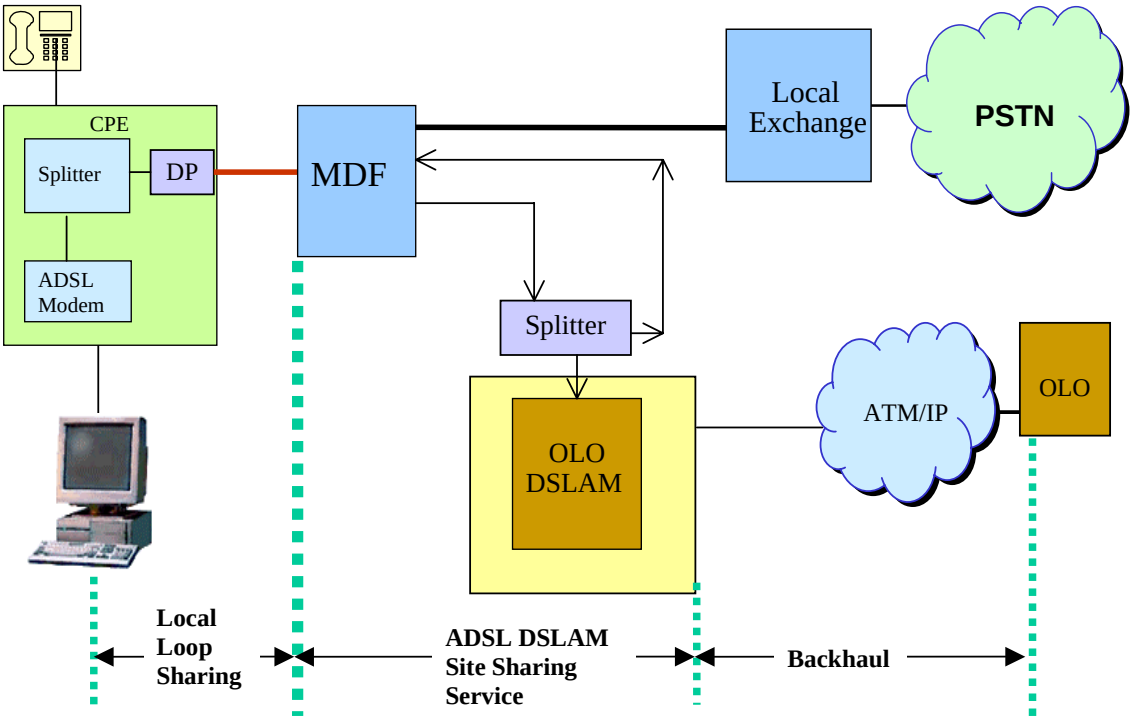

Figure 1: Local Loop Sharing Service of Line Sharing

3.2 STC will provide the Local Loop Sharing Service to OLOs who are duly licensed by the Communications and Information Technology Commission (CITC), Kingdom of Saudi Arabia, to provide the ADSL Service using the STC Local Loop Sharing Service and who have signed the Agreement with STC in this regard.

3.3 The Line Sharing Service will only be offered on local loops where STC supplies the relevant end user with the analogue telephone service. After the Line Sharing Service has been implemented, this single line (i.e. shared loop) with the aid of splitters / micro-filters, will simultaneously support two different Service Providers, STC for analogue PSTN service and an OLO for ADSL service.

3.4 For the avoidance of doubt, if a subscriber should cease their STC analogue telephone service, then by default the OLO ADSL service will have to cease at the same time. Upon receiving a request to cease an STC voice service which also has a Line Sharing Service STC will contact the voice customer informing them that the broadband service will also cease on the same date and requesting confirmation that the voice customer wishes to proceed with the request. STC will also inform the OLO of the request to cease the STC voice service and will notify the OLO when confirmation is received from the voice customer. STC will then cease both services on the date requested by the voice customer.

3.5 A pre requisite for the Local Loop Sharing Service is the availability of the Physical ADSL DSLAM Site Sharing area with Tie Cables provided to the OLO at a relevant MDF site under the terms and conditions documented in this Annex G.

3.6 The OLO will connect its ADSL equipment to its HDF (Hand Over Distribution Frame) as described in the ADSL DSLAM Site Sharing Service for Line Sharing under Schedule [2.2] of this Annex G.

3.7 The points of demarcation between STC and the OLO will be the Subscriber Termination Box (STB) at the Subscriber's premises and the connection between the STC installed Splitters and Blocks on the OLO's HDF.

3.8 The technical requirements of the Local Loop Sharing Service has been provided in the STC Local Loop Sharing technical specifications document provided in Annex C (*Technical Information).*

3.9 The Local Loop Sharing Service will be implemented on a dedicated point-to-point metallic path between a specified Subscriber's premises and the existing DSLAM site sharing OLO's Equipment using the appropriate connections and Tie Cables.

3.10 STC does not guarantee that the Local Loop Sharing Service will be available at all main Exchange sites throughout the Kingdom (provided in attachment 8 of Annex H).

3.11 The Local Loop Sharing Service will only be provided on condition that the OLO is prepared to adhere to the limitations specified by STC. In order to address any network interference issues, all equipment connected to the Shared Line Service must comply with any Access Network Frequency Plan produced by STC, in coordination with CITC, and the specifications in Annex C (*Technical Information*).

3.12 In order for a metallic path or local loop to be eligible for the Local Loop Sharing Service:

a) The analogue PSTN Service must be provided to the Subscriber by STC and the dial tone must originate from STC Equipment at the MDF site where the Local Loop Sharing Service is being requested.

b) An existing metallic path, currently carrying analogue telephone service, must be available to the Subscriber's premises.

c) Network conditioning is the term used to describe any additional work that STC may have to carry out to provide the requested service, such as to make copper loops suitable for use in providing Bitstream or Shared Access Services. This work will involve major activities required to support the transmission systems of DSL technologies such as making an undertaking of a solution to replace a "Pair-Gain" systems or microwave links. However, if such network conditioning was not already included in STC network plans, STC will charge for the additional

work or, in exceptional circumstances, decline to provide the service. Charges will be as detailed in Annex F – Price List.

3.13 The ADSL technology deployed by the OLO must not interfere with the analogue voice band transmission provided by STC. To avoid the possibility of interference, the OLOs must comply with the specifications detailed in any Access Network Frequency Plan produced by STC in coordination with CITC and Annex C (*Technical Information).*

3.14 The OLO is responsible for providing its own, relevant, Compliant Equipment to the STC site facilities in accordance with the ADSL DSLAM Site Sharing arrangements set out in Schedule [2.2] of Annex G (*Service Schedules*).

3.15 The ADSL equipment which the OLO proposes to use at the ADSL DSLAM Sites must be type approved by CITC as detailed in Annex C (*Technical Information*).

3.16 STC reserves the right to reject the request of the OLO where such equipment, in STC ‘s opinion, causes potential harm or incompatibility of operation to the STC Network and has not been type approved by CITC.

3.17 The ADSL DSLAM Site Sharing facility is provided to the OLO for the purpose of providing accommodation for equipment installed to provide ADSL service to Subscribers via the Local Loop Sharing Service, i.e. the DSLAM units . OLOs are therefore not permitted to house equipment in the ADSL DSLAM Site Sharing space that is not for this purpose.

3.18 The OLO is responsible for providing or arranging for any Customer Premises Equipment (CPE) that may be required at the Subscriber’s premises for the ADSL service.

3.19 STC will be responsible for line test facilities (LTS) for the metallic path that is used for the Local Loop Sharing Service.

4. Service Provisioning

4.1 This Clause 4 applies where the Other Licensed Operator wishes to use the Local Loop Sharing Service provided by STC in respect of which the process in this Clause 4 has not already been undertaken.

4.2 The Other Licensed Operator shall notify STC by means of the request form set out in Annex H (*Operations and Maintenance Manual*) if it requests the use of a Local Loop Sharing Service.

4.3 STC shall acknowledge, in writing, receipt of the Other Licensed Operator's request under Clause 4.2 above within five (5) Business Days of its receipt.

4.4 Following receipt of a request under Clause 4.2 above, STC shall assess that request and notify the Other Licensed Operator within ten (10) Business Days that either:

a. The implementation of the request in respect of the requested Local Loop Sharing Service involves only network conditioning in STC's Network, in which case the negotiation period shall be thirty (30) Business Days; or

b. The implementation of the request in respect of the requested Local Loop Sharing Service involves work additional to or as an alternative to network conditioning in STC's Network, in which case the negotiation period shall be sixty (60) Business Days, or

c. Facilities are unavailable.

4.5 The Parties shall forthwith negotiate in good faith the requirements, implementation charges and timetable for the use of the Local Loop Sharing Service provided by STC in accordance with the Other Licensed Operator's request under Clause 4.2 above for the negotiation period specified in Clause 4.4 (a) and (b) above failing which either Party may commence the Dispute Resolution Procedure as defined in Clause 14 of the RODA Primary Document.

4.6 Where the Parties have reached an agreement, in accordance with 4.4 (a) and (b) above, STC will commence implementation in accordance with the agreed timetable.

4.7 Nothing in this Clause 4 requires STC to perform any changes in its Network or to commence the supply of the Local Loop Sharing Service until the Parties have completed the preparation for the Local Loop Sharing Service and all network conditioning Charges have been agreed to by the Other Licensed Operator.

4.8 The Other Licensed Operator may, at any time, request STC to cease supplying the Local Loop Sharing Service and STC shall cease supplying the Local Loop Sharing Service as soon as practicable or at such time as specified by the Other Licensed Operator in accordance with terms and conditions specified in Clause 15 (Breach, Suspension and Termination) of the RODA Primary Document.

4.9 The timeframes mentioned in this Schedule relating to pre–provisioning work undertaken by STC under Annex H (*Operations and Maintenance Manual*), such as the completion of project studies and assessment of applications, may be subject to delays caused by events outside of STC's reasonable control. In those circumstances STC may extend the timeframes for a period of time equal to the period of time of such delays.

4.10 For the avoidance of doubt, a failure to meet the timeframes that is caused by events outside STC's reasonable control does not constitute a breach of this schedule or this RODA.

5. Availability of the Local Loop Sharing Service

5.1 For the purposes of this Schedule, STC shall consider the following points when assessing the availability of the Local Loop Sharing Service.

a) Whether the Subscriber has services other than the 'normal' Voice Line service. Systems that would not be compatible with DSL will include but not be limited to the following:

- any system that introduces voltages and / or currents on to a loop that does not comply with technical specifications compatible with operational requirements of the STC access network;
- any asymmetric DSL system connected in reverse, i.e. with the DSLAM located at the customer end termination of a loop;
- systems using HDB3 line code; see ETSI TR 101 803-1 paras. 10.12 and 10.13
- systems using ADSL over ISDN;
- systems using ADSL that employ echo cancellation and do not use frequency division duplexing (FDD).

STC will develop this list in consultation with OLOs and agree how broadband orders which may conflict with existing STC services should be managed. The list and the associated procedures will be published in the STC RODA.

b) For that same Subscriber or telephone line/number, whether any other request has been received from another OLO for the Local Loop Sharing Service.

c) Whether STC has any major Network modification plans or otherwise proposes to decommission the Local Loop.

6. Forecasts

6.1 Forecasts for the Local Loop Sharing Service shall be submitted to STC according to the procedures detailed in Annex E *(Forecasting).*

7. Charging

7.1 Charges for the Local Loop Sharing Service shall be those published in Annex F *(Price List).*

8. Billing

8.1 STC shall use its reasonable endeavours to provide Billing Information for the Local Loop Sharing Service in accordance with the format set out in Annex B (*Billing Processes and Procedures*) within thirty (30) Business Days from the end of each Billing Period, together with the invoice for the Local Loop Sharing Service.

8.2 In addition to the obligation in this Clause 8.1, when there is a dispute in relation to invoices issued for the Local Loop Sharing Service, the parties shall exchange the appropriate Billing Information.

8.3 In the event that STC cannot provide the appropriate Billing Information for the Local Loop Sharing Service due to a system error or other faults, upon request of STC, the Other Licensed Operator shall be requested to provide appropriate Billing Information to STC in accordance with the procedure set out in Annex B (*Billing Processes and Procedures*).

8.4 Where the Billing Information collected by the Other Licensed Operator is not available under this Clause 8.3, the Parties shall negotiate in good faith alternative Billing arrangements.

SAUDI TELECOM COMPANY

Reference Offer for Data Access (RODA)

Annex G, Schedule 2.2

ADSL DSLAM SITE SHARING SERVICE

FOR LINE SHARING

SCHEDULE [2.2] ADSL DSLAM SITE SHARING SERVICE FOR LINE SHARING

1. General

1.1 STC will supply the ADSL DSLAM Site Sharing Service for Line Sharing to the Other Licensed Operator in respect of the Services for which the process in Clause 4 of this Schedule [2.2] has been followed.

1.2 For the avoidance of doubt, the Other Licensed Operator must initiate the process in Clause 4 of this Schedule [2.2] if it wishes to acquire the ADSL DSLAM Site Sharing Service for Line Sharing, not previously covered by a request made under that Clause.

1.3 STC will only be required to provide ADSL DSLAM Site Sharing Service for Line Sharing to the Other Licensed Operator to the extent that the Other Licensed Operator has complied with provisions of the RODA Primary Document.

2. Service Definitions

Service	*Definition*
ADSL DSLAM Site Sharing Service for Line Sharing	The ADSL DSLAM Site Sharing Service is provided in designated areas outside of the confines of the STC exchange building but within the confines of the STC Exchange Overall Site where ADSL DSLAM Site Sharing Services have been requested and includes the provision of Tie Cables connecting the HDF in the Site Sharing facility to the STC MDF.

3. Description of Services

3.1 The ADSL DSLAM Site Sharing Service for Line Sharing is as shown in Figure1 below:

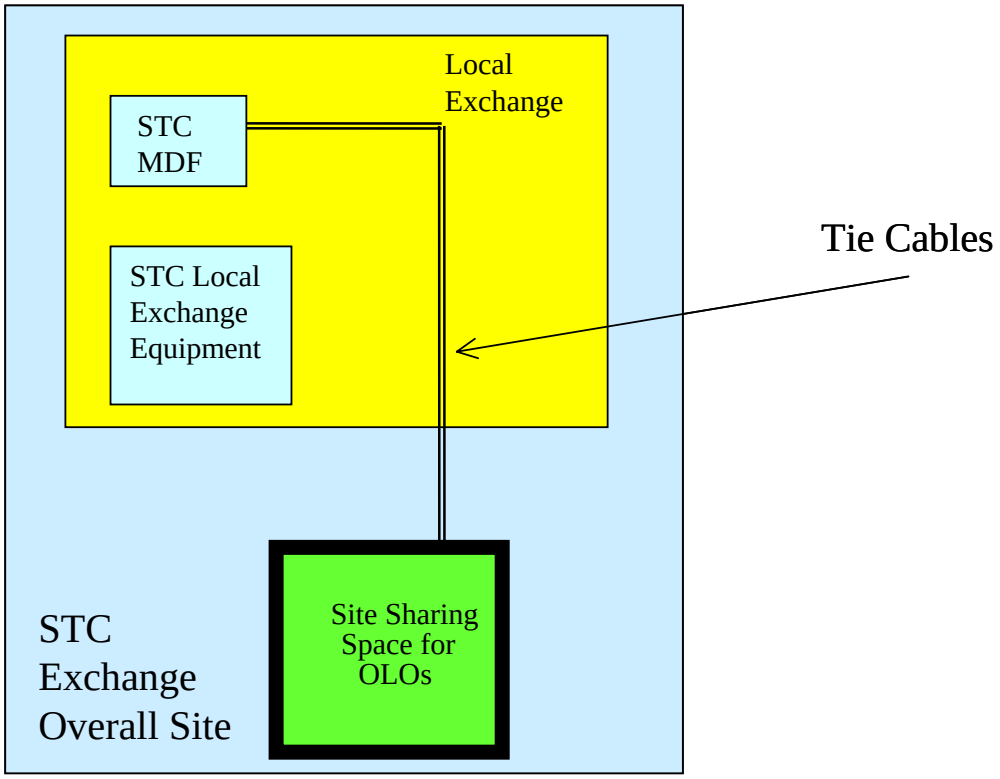

Figure 1: DSLAM Site Sharing

3.2 For the ADSL DSLAM Site Sharing Service component of Line Sharing STC offers the space, where available and technically feasible, for the sharing of the OLO ADSL equipment outside of the building where STC's Equipment is located, but inside the confines of the overall site occupied by STC Exchange equipment (STC Exchange Overall Site). This will involve the provisioning by STC of a separate

building, where feasible, together with other facilities such as Tie Cables, Air-conditioning and AC/DC Power, for the operation of the OLO's ADSL Equipment.

3.3 STC will plan and build an ADSL DSLAM Site Sharing Facility which is capable of housing more than a single OLO, and will arrange to 'let' access to more than a single OLO based on demand.

3.4 The 'first' requesting OLO will be responsible for the costs of the plan and build of the ADSL DSLAM Site Sharing Facility.

3.5 Subsequent OLO's will contribute to the costs of the plan and build of the ADSL DSLAM Site Sharing Facility. OLO(s) already using the facility will be compensated, in equal percentage share, to the limit of the value of the original plan and build costs of the ADSL DSLAM Site Sharing Facility.

3.6 For the avoidance of doubt, the first OLO will pay 100% of the plan and build cost of the ADSL DSLAM Site Sharing Facility. The second OLO will pay 50% of the original plan & build costs to the first OLO. The third OLO will pay 16.66% of the original plan and build costs to the first two OLO's. This process will continue for further, subsequent, OLO's.

3.7 Subject to the provisions of this Clause 3, STC shall provide space within specified STC Exchange Overall Site areas that have been designated suitable for the installation and operation of Other Licensed Operator's ADSL Equipment.

3.8 STC shall provide ADSL DSLAM Site Sharing Service for Line Sharing to the Other Licensed Operator for the contracted period at the standard and quality of service as defined in Annex I (*Quality of Service*).

3.9 The Parties shall agree in advance all necessary technical requirements, including Footprint, External and Internal Tie Cable capacity, Adequate Floor Loading, Power, Alarm Management, Air Conditioning, Fire Alarm and Suppression Systems, Security and Access arrangements.

3.10 Except as provided in this Schedule, the Other Licensed Operator shall provide all installation materials and manpower needed for the installation of its Equipment at the ADSL DSLAM Site Sharing Service site.

3.11 Access to the ADSL DSLAM Site Sharing Service areas shall be restricted to authorized Other Licensed Operator personnel and/or their authorized nominated contractors, for whom the Other Licensed Operator will assume full responsibility.

3.12 STC will reserve the right of access to the ADSL DSLAM Site Sharing Facility at any time in order to carry out planned maintenance of the building, power and ancillary service systems.

3.13 Each Party shall correct faults that occur in its Network which affect the provision of the ADSL DSLAM Site Sharing Service for Line Sharing in accordance with each Party's normal engineering practices. For the avoidance of doubt, neither Party warrants that its Network is, or will be, free from faults.

3.14 In the event that a fault in the Other Licensed Operator's co-located equipment becomes service affecting in the STC network, STC reserves the right to suspend services to the Other Licensed Operator's equipment until such time as the cause of the fault is identified and the fault rectified.

3.15 For use of the ADSL DSLAM Site Sharing Service for Line Sharing, the Other Licensed Operator shall pay STC charges calculated in accordance with the pricing provided Annex F (*Price List*).

3.16 For the purposes of this Schedule, STC may have regard to the following when assessing the availability of ADSL DSLAM Site Sharing Space at an STC Exchange Overall Site:

- STC's reserved requirements of the space for the next three (3) Years for network Expansion Programs;
- Proposed and planned space requirements covering the next three (3) Years previously submitted by other OLOs;

- STC's reserved space requirements for the next three (3) years at the ADSL DSLAM Site Sharing area for operational and maintenance purposes;
- Other, Other Licensed Operator requirements (including those for operation and maintenance purposes) which have been ordered but not yet delivered or which have been provided;
- Security and confidentiality requirements imposed on STC by Governmental Agencies;
- STC has plans to, or otherwise proposes to, decommission the ADSL DSLAM Site Sharing area.

3.17 The Requesting Other Licensed Operator has no rights to assign to a third party in whole or in part the license in respect of the ADSL DSLAM Site Sharing Space or to sub-let the Site Sharing Space at the STC Exchange Overall Site.

3.18 The list of STC Exchange Sites at which the ADSL DSLAM Site Sharing Service for Line Sharing may be requested is contained in Annex H (*Operations and Maintenance Manual*). It should be noted that the availability of the ADSL DSLAM Site Sharing Service for Line Sharing at any of the listed locations is not guaranteed and will be subject to a physical survey carried out in accordance with Clause 4.4 a) of this Schedule [2.2].

4. Service Provisioning

4.1 This Clause 4 applies to all requests by the Other Licensed Operator to use the ADSL DSLAM Site Sharing Service for Line Sharing provided by STC. For the avoidance of doubt this also includes requests for additional ADSL DSLAM Site Sharing Service as well as replacement, modification and rearrangement of existing ADSL DSLAM Site Sharing Service.

4.2 The Other Licensed Operator shall notify STC of its request for the use of the ADSL DSLAM Site Sharing Service by means of the request form set out in Annex H (*Operations and Maintenance Manual*) if it wishes to use the ADSL DSLAM Site Sharing Service for Line Sharing. This is the Preliminary Survey Request.

4.3 STC shall acknowledge, in writing to the Other Licensed Operator's nominated representative, receipt of the Other Licensed Operator's Preliminary Service Request under Clause 4.2 within five (5) Business Days of its receipt.

4.4 Following receipt of a Preliminary Service Request under Clause 4.2, STC shall carry out a Preliminary Survey to assess the suitability or otherwise of the STC Exchange Overall site. The Preliminary Survey will carry out the visual inspection for assessment of the space availability and for any apparent obstacles etc. and would also carry out an initial evaluation of the Power and Air-conditioning facilities for the provision of DSLAM Site Sharing Service.

4.5 STC will provide the results of the Preliminary Survey to the Other Licensed Operator within fifteen (15) Business Days of acknowledgement that either:

a) There is potentially sufficient space available at the requested STC Exchange Overall Site subject to the satisfactory completion of a Final (Professional) Survey or that the STC Overall Exchange site is not suitable for the DSLAM Site Sharing Service. Subject to the Other Licensed Operator requesting the Final Survey, STC will carry out the Final Survey to establish the following:

- Carry out detailed survey of the site for the civil works.
- Assessment of the site preparation requirements
- Assessment of the A.C and D.C Power requirements
- Assessment of the Air Conditioning requirements
- Mobilization Requirements

- Assess any requirement for upgrading existing facilities and supplies,
- Identifying the main elements of the plans for the Civil works

4.5.1 The OLO shall pay the cost of the Final Survey as detailed in Annex F (*Price List*). Such a Final Survey will take place within – 2 months from acceptance of the Preliminary Service request. For any other detailed Engineering Plans and designs needed for the implementation phases, STC will outsource these services and these would include but not limited to Power & Alarm Management, Security & Alarm Management Electrical Design and Air Conditioning, Internal & External Tie cables facilities including Handover Distribution Frames and MDF Expansion design if required, preparation of Designs & Engineering Plans for various works along with work Schedules and Bill of Quantities and Prices. The OLO will pay for all the expenses incurred in procuring the above mentioned outsourced services based on the specifications provided by STC.

4.5.2 Based on the results of the Final Site Survey and the preparation of the required Engineering Plans & Designs and the Work Schedules, STC shall:

- Agree the planned work schedule and costs with the Other Licensed Operator
- Confirm acceptance of the ADSL DSLAM Site Sharing facility by the Other Licensed Operator.
- Confirm acceptance of the one-off costs of the building service to be paid by the Other Licensed Operator according to Annex F (*Price List*).
- Accept the Other Licensed Operator's order for ADSL DSLAM Site Sharing Service for Line Sharing
- Execute building works.

b) There is not sufficient space at the STC Exchange Overall Site, in which case STC will provide the reasons for such rejection to the Other Licensed

Operator. STC may reject a request for the ADSL DSLAM Site Sharing Service for Line Sharing if any of the following applies:

- The Request Form for ADSL DSLAM Site Sharing Service for Line Sharing is not in the prescribed form; or
- The data contained in the Request form for the ADSL DSLAM Site Sharing Service for Line Sharing is incomplete; or
- There is no available space at the STC Exchange Overall Site as determined in accordance with Clause 3.12 of this Schedule [2.2] and the work required to create such space can be demonstrated to be practically and/or economically unviable.
- Acceptance of the ADSL DSLAM Site Sharing Service for Line Sharing request will give rise to significant health, safety, interface, technical or engineering issues.

.

4.6 STC shall recover the Preliminary Survey fee for the cost of processing the Request for ADSL DSLAM Site Sharing Service for Line Sharing irrespective of the outcome of the Preliminary Survey. The Survey fees are as detailed in Annex F (*Price List*).

5. Tie Cable Requirements

5.1 For all ADSL DSLAM Site Sharing Services for Line Sharing, STC will provide connectivity between the OLO HDF and the termination point of the local loops in the STC copper access network on the STC MDF through the splitters.

5.2 Physical connectivity from the OLO ADSL DSLAM Site Sharing Facility to the STC MDF will be by the use of Tie Cables. The technical details of Tie Cables for use in the ADSL DSLAM Site Sharing Service are given in Annex C (*Technical Information*).

5.3 The provision of Tie Cables will be subject to physical and / or technical limitations highlighted during the service planning stage of the professional survey. External

Tie Cable capacity will be provided to meet the forecast requirements for the full life of the ADSL DSLAM Site Sharing Facility.

5.4 The Internal Tie Cable will be provided with capacity to meet the OLO's requirements for the first 5 years of the ADSL DSLAM Site Sharing Service operations, with additions in increments of 100 pairs. All Tie Cables will have a nominal conductor diameter of 0.4mm. A technical description of all Tie Cables is contained in Annex C (*Technical Information*).

5.5 The provision of the External Tie Cable(s) may require STC to obtain mandatory consents and approvals, especially where new duct(s) are called for. STC shall endeavour to obtain the necessary consents and approvals for the provision of the External Tie Cable(s). STC reserves the right to suspend its obligations under the terms of the order process where it is unable to obtain the said consents and approvals within the timescales required to enable the commissioning of the External Tie Cable(s) within the agreed delivery period. Under these circumstances STC's obligations will be suspended until such time as the consents and approvals are obtained. STC reserves the right to adjust the expected delivery time to make good for any and all delays beyond its control. In addition, STC will be entitled to recover from the OLO any costs incurred as a result of the delay.

5.5.1 It is the responsibility of the OLO to ensure that STC has access to any of its equipment and cables at the ADSL DSLAM Site Sharing Facility on request in order to facilitate provision and maintenance of External Tie Cable(s). If provision of access requires the consent of a third party it is the responsibility of the OLO to obtain such consent.

5.5.2 Any loss, theft, damage to or destruction of STC equipment housed in the DSLAM Site Sharing Facility (reasonably expected wear and tear excluded) shall be the sole responsibility of the OLO unless it is proved that the cause of such loss, theft, damage or destruction was attributable to STC.

5.6 Operational Requirements

5.6.1 Internal Tie Cable(s) shall comply with the specifications detailed in Annex C (*Technical Information*).

5.7 Handover Distribution Frame (HDF)

5.7.1 The Handover Distribution Frame (HDF) will be constructed from multiple termination blocks in accordance with the STC Copper Access Network specifications. At all ADSL DSLAM Site Sharing Sites, STC will supply and install the HDF blocks and metalwork at the expense of the OLO.

5.8 Technical Description

5.8.1 A technical description of all Tie Cables used in the provision of ADSL DSLAM Site Sharing Service for Line Sharing is contained in Annex C (*Technical Information*) Attachment 4 – Tie Cable Characteristics..

6. Forecasts

6.1 Forecasts for the ADSL DSLAM Site Sharing Service shall be submitted to STC according to the procedures detailed in Annex E *(Forecasting)*.

7. Charging

7.1 Charges for ADSL DSLAM Site Sharing Service for Line Sharing shall be those published in Annex F *(Price List)*.

7.2 Charges for the ADSL DSLAM Site Sharing Service for Line Sharing will be available on request following the completion of the activities outlined in Clause 4.4 of this Schedule. The charges may include the following:

a) One-off costs, which will include but not be limited to:

- A physical site survey of the specified site area
- Production of work Schedule and bill of quantities

- Construction and / or provision of the ADSL DSLAM Site Sharing building or container
- Provision of Tie Cables and associated ducts, inspection chambers, cable trays, trunking, etc.
- Installation of security systems
- Provision of standard and/or enhanced ancillary support systems
- Upgrading power supplies and engine sets, lighting, heating and ventilation systems
- Providing external duct, inspection chambers and cables
- Providing internal cables
- Development and/or upgrading OSS
- Product development
- Development of new processes, procedures and work practices

b) Recurring Costs, which will include but not be limited to;

- Rental for the ADSL DSLAM Site Sharing space used
- Maintenance of the ADSL DSLAM Site Sharing facilities and equipment areas
- Maintenance of ancillary support systems
- Power supplies, lighting, heating and ventilation systems
- Maintenance of external plant and cables
- Maintenance of internal cables
- Order management
- Security

8. Billing

8.1 STC shall use its reasonable endeavours to provide Billing Information for the ADSL DSLAM Site Sharing Service for Line Sharing in accordance with the format set out in Annex B (*Billing Processes and Procedures*) within thirty (30) Business Days from the end of each Billing Period, together with the invoice for the ADSL DSLAM Site Sharing Service for Line Sharing Service..

8.2 In addition to the obligation in Clause 8.1 above, when there is a dispute in relation to invoices issued for the ADSL DSLAM Site Sharing Service for Line Sharing Service, the parties shall exchange the appropriate Billing Information.

8.3 In the event that STC cannot provide the appropriate Billing Information for the ADSL DSLAM Site Sharing Service for Line Sharing Service and due to a system error or other faults, upon request of STC, the Other Licensed Operator shall be requested to provide appropriate Billing Information to STC in accordance with the procedure set out in Annex B (*Billing Processes and Procedures*).

8.4 Where the Billing Information collected by the Other Licensed Operator is not available under Clause 8.3 above, the Parties shall negotiate in good faith alternative Billing arrangements.

SAUDI TELECOM COMPANY

Reference Offer for Data Access (RODA)

Annex G, Schedule 2.3

WHOLESALE BACKHAUL

FOR LINE SHARING SERVICE

SCHEDULE [2.3] WHOLESALE BACKHAUL FOR LINE SHARING SERVICE

1. General

1.1 STC will supply the Wholesale Backhaul for Line Sharing Service to the Other Licensed Operator in accordance with Clause 3 of the Primary Document in respect of the Services for which the process in Clause 4 of the this Schedule [2.3] has been followed.

1.2 For the avoidance of doubt, the process in Clause 4 of this Schedule [2.3] must be initiated by the Other Licensed Operator if it wishes to acquire the Wholesale Backhaul for Line Sharing Service not previously covered by a request made under Clause 4 of this Schedule [2.3].

1.3 Notwithstanding the connection of STC's Network and the Other Licensed Operator's network, STC shall have no obligation to provide services other than those specified for the provision of the Wholesale Backhaul for Line Sharing Service within standard delivery lead-times where appropriate, (extended lead-times where plant is not available) and subject to standard engineering and commercial principles.

1.4 STC will only be required to provide the Wholesale Backhaul for Line Sharing Service to the Other Licensed Operator to the extent that the Other Licensed Operator has complied with Annex H (*Operations and Maintenance Manual*) and this Schedule [2.3].

2. Service Definition

Service	*Definition*
Wholesale Backhaul for Line Sharing Service	A service where STC provides Wholesale IP/VPN Transmission capacity over its Data Transport network as tunnel from the OLO DSLAM Sharing STC site to the premises of the OLO.

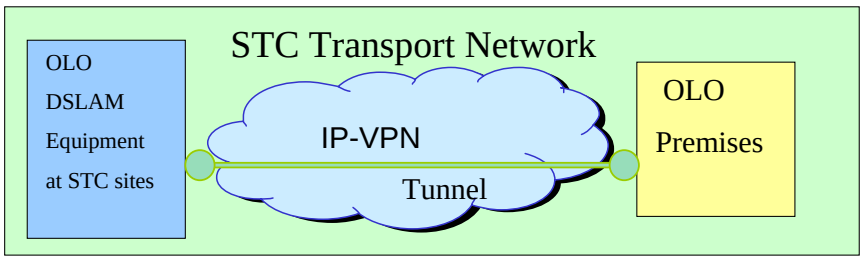

Figure 1: Wholesale Backhaul for Line Sharing Service

3. Description of Service

3.1 Subject to the provisions of this Schedule, STC shall provide the Wholesale Backhaul for Line Sharing Service between the OLO DSLAM equipment at an STC site to the OLO premises as shown in Figure 1 above.

3.2 STC shall provide the Wholesale Backhaul for Line Sharing Service to the Other Licensed Operator for the contracted period and at the same standard and quality of service as it provides for similar circuits.

3.3 The Parties shall agree in advance all the necessary technical requirements, including physical circuit installation and operation for the provision of the Wholesale Backhaul for Line Sharing Service pursuant to this Schedule [2.3].

3.4 Each Party shall locate and correct faults that occur in its Network which affect the performance of the Wholesale Backhaul for Line Sharing Service in accordance with each Party's normal engineering practices. For the avoidance of doubt, neither Party warrants that its Network is, or will be, free from faults.

3.5 The Wholesale Backhaul for Line Sharing Service will be provided using agreed appropriate technology including both fixed and wireless systems.

3.6 For the provision of each Wholesale Backhaul for Line Sharing Service, the Other Licensed Operator shall pay STC charges in accordance with the rates for such circuits as specified from time to time in Annex F *(Price List)*.

4. Service Provisioning – Initial Procedure

4.1 This Clause 4 applies where the Other Licensed Operator wishes to use the Wholesale Backhaul for Line Sharing Service provided by STC in respect of which the process in this Clause 4 has not already been undertaken.

4.2 The Other Licensed Operator shall notify STC by means of the request form set out in Annex H (*Operations and Maintenance Manual*) if it requests the use of a Wholesale Backhaul for Line Sharing Service.

4.3 STC shall acknowledge, in writing, receipt of the Other Licensed Operator's request under Clause 4.2 above within five (5) Business Days of its receipt.

4.4 Following receipt of a request under Clause 4.2 above, STC shall assess that request and notify the Other Licensed Operator within ten (10) Business Days that either:

a. The implementation of the request in respect of the requested Wholesale Backhaul for Line Sharing Service involves only network conditioning in STC's Network, in which case the negotiation period shall be thirty (30) Business Days; or

b. The implementation of the request in respect of the requested Wholesale Backhaul for Line Sharing Service involves work additional to or as an alternative to network conditioning in STC's Network, in which case the negotiation period shall be sixty (60) Business Days, or

c. Facilities are unavailable.

4.5 The Parties shall forthwith negotiate in good faith the requirements, implementation charges and timetable for the use of the Wholesale Backhaul for Line Sharing Service provided by STC in accordance with the Other Licensed Operator's request under Clause 4.2 for the negotiation period specified in Clause 4.4 (a) and (b) above failing which either Party may commence the Dispute Resolution Procedure as defined in Clause 14 of the Primary Document.

4.6 Where the Parties have reached an agreement, in accordance with 4.4 (a) and (b) above, STC will commence implementation in accordance with the agreed timetable.

4.7 Nothing in this Clause 4 requires STC to perform any changes in its Network or to commence the supply of the Wholesale Backhaul for Line Sharing Service until the Parties have completed the preparation for that Wholesale Backhaul for Line Sharing Service and all network conditioning Charges have been agreed to by the Other Licensed Operator.

4.8 The Other Licensed Operator may, at any time, request STC to cease supplying the Wholesale Backhaul for Line Sharing Service and STC shall cease supplying the Wholesale Backhaul for Line Sharing Service as soon as practicable or at such time as specified by the Other Licensed Operator in accordance with terms and conditions specified in Clause 15 (Breach, Suspension and Termination) of the RODA Primary Document.

5. Charging

5.1 For all Wholesale Backhaul for Line Sharing Services provided by STC, STC will collect the Wholesale Backhaul for Line Sharing Service charges from the Other Licensed Operator.

5.2 STC shall, for those circuits for which it is providing a Wholesale Backhaul for Line Sharing Service, collate a record for each individual circuit which shall be used by STC to invoice for the Wholesale Backhaul for Line Sharing Service it provides under this RODA.

5.3 The calculation of Charges for the Wholesale Backhaul for Line Sharing Service will be based on the applicable rates set out in Annex F *(Price List)*.

5.4 Charging commences upon the formal completion of the handover of each circuit.

6. Billing Information

6.1 STC shall use its reasonable endeavours to provide Billing Information for the Wholesale Backhaul for Line Sharing Service in accordance with the format set out in Annex B (*Billing Processes and Procedures*) within thirty (30) Business Days from the end of each Billing Period, together with the invoice for the Wholesale Backhaul for Line Sharing Service.

6.2 In addition to the obligation in Clause 6.1 above, when there is a dispute in relation to invoices issued for the Wholesale Backhaul for Line Sharing Service, the parties shall exchange the appropriate Billing Information.

6.3 In the event that STC cannot provide the appropriate Billing Information for the Wholesale Backhaul for Line Sharing Service due to a system error or other faults, upon request of STC, the Other Licensed Operator shall be requested to provide appropriate Billing Information to STC in accordance with the procedure set out in Annex B (*Billing Processes and Procedures*).

6.4 Where the Billing Information collected by the Other Licensed Operator is not available under Clause 6.3 above, the Parties shall negotiate in good faith alternative Billing arrangements.

7. Routing

7.1 The provision of the Wholesale Backhaul for Line Sharing Service shall be in accordance with the STC MPLS IP-VPN services.