هيئة الاتصالات وتقنية المعلومات
Communications and Information Technology Commission

Annex B - I

Technical Standards for In-building Physical Infrastructure (IPI) for Multi Dwelling Units

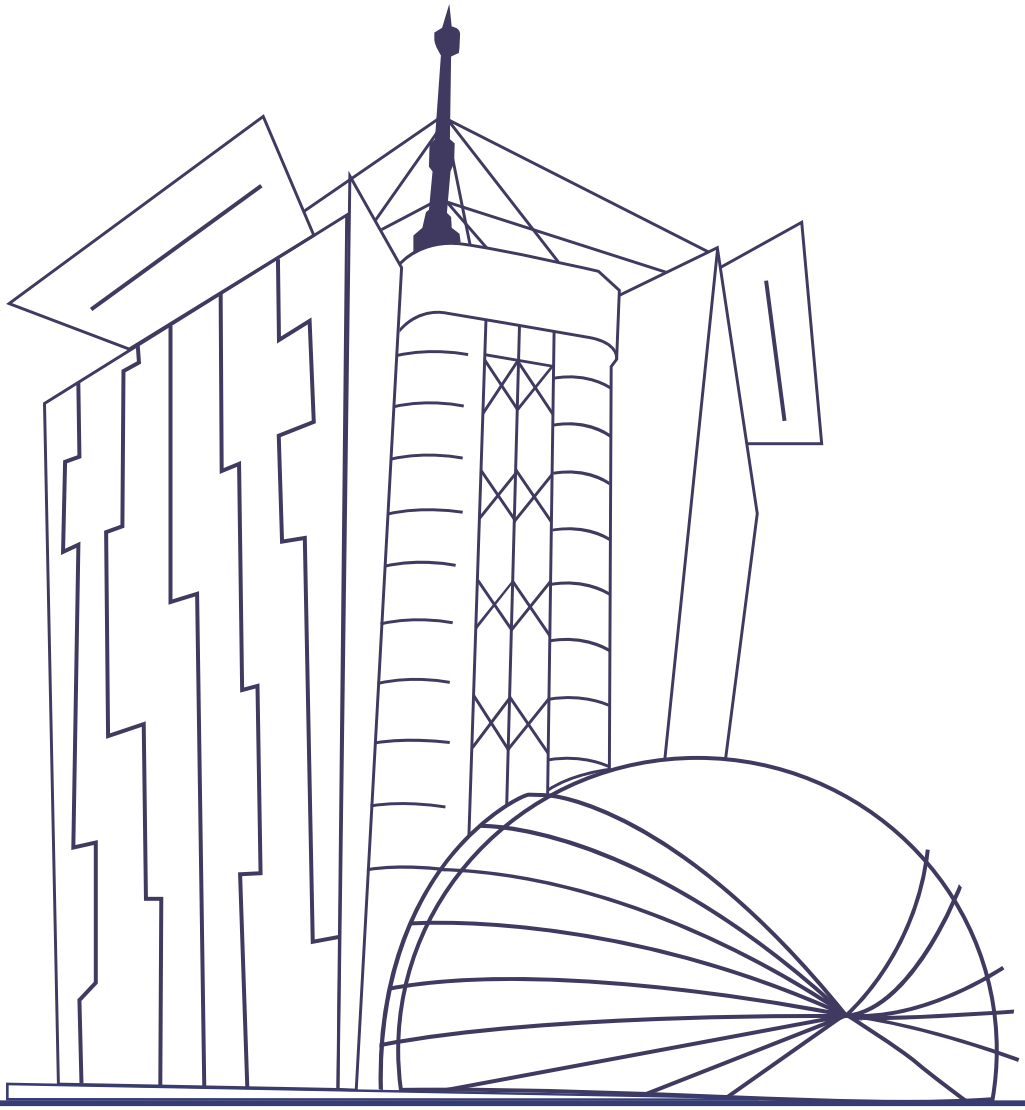

Page	Contents	
4	Purpose and Scope	1
4	Purpose	1.1
4	Scope	1.2
4	Definitions	2
6	Configuration	3
6	Reference Configuration	3.1
7	Options for the Internal Cabling	3.2
7	Floor Distributor Topology	3.2.1
8	Star topology	3.2.2
9	Main Requirements	4
9	General Requirements	4.1
9	Specific Requirements for Mobile Services	4.2
9	Specific Requirements for In-building Infrastructure Elements	5
9	Internal Cabling	5.1
10	Bend Radius	5.1.1
10	Access Point	5.2
10	Lead-in Duct	5.3
11	Telecommunications Room	5.4
12	Building Distribution Frame BDF	5.5
12	Riser Area	5.6
12	Floor Distributor	5.7
12	Unit Distributor	5.8
13	Network Termination	5.9
13	Installations	5.10
13	Testing	5.11
13	Documentation	5.12

1. Purpose and Scope

1.1 Purpose

This document provides technical standards for Outside Plant (OSP) Infrastructure to ena-
This document provides the technical standards for In-building Physical Infrastructure for Multi Dwelling Unit (MDU) buildings to enable all Building Developers and licensed Facilities Based Service Providers to design and deploy telecommunications network infrastructure in new public and private buildings.

These standards have been established with the aim of ensuring that any In-building Physical Infrastructure in New Developments is built in accordance with a common national telecommunication standard and meets international best practice.

1.2 Scope

These standards apply to all new Multi-Dwelling Unit buildings (residential, commercial, industrial, governmental, etc.). They apply to all In-building Physical Infrastructure and include the most commonly used materials specifications for In-building Physical Infrastructure.

These standards shall be observed by Building Developers and FBPs.

These standards do not change any obligations imposed by other administrative authorities. Installations in buildings shall strictly meet the requirements set by the relevant authorities having jurisdiction. Thus, the installations shall comply with all provisions, rules and guidelines established by these authorities.

2 Definitions

Access Point means a physical location, located outside the building, accessible to Facilities' based Service Providers (FBPs), where connection to the In-building Physical Infrastructure is made available. It is part of the Outside Plant and it is the demarcation point between Outside Plant and In-building Physical Infrastructure.

Access Area means the physical location containing the lead-in ducts and cabling from the Access Point to the Telecommunications room.

Building Distribution Frame (BDF) means a distribution element between the Outside Plant and the In-building Physical Infrastructure (inside plant). The BDF allows connection of the lead-in cables from the Access Point (outside the premises) to the cables leading to each Unit.

Developer means a Person who develops real estate, especially by preparing a site for residential, commercial, industrial or governmental or any other special purpose or mixed use (Land Developer). A Developer may also engage in the construction of buildings on such real estate (Building Developer). Often, the owner of the real estate is also the Developer. He is responsible for observing building regulations for construction and land development works.

Floor Distributor (FD) means a sub-dividing element between the BDF and the Unit Distrib-

utor / Network Termination Points located nearby or in the riser area which allows the transition from the vertical to the horizontal indoor cable. Use of Floor Distributors is optional.

High-speed-ready means OSP and In-building Physical Infrastructure that hosts all necessary passive network elements that enable the delivery of high-speed electronic Telecommunications Networks. High-speed means an access connection with a minimum download speed of 100 Mbit/s, and with a 1 Gbit/s download speed eventually attainable.

In-building Physical Infrastructure (IPI) means Passive Network Components in a building connecting the Access Point with the Network Termination Points in the building units (also known as Inside Plant). In-building Physical Infrastructure comprises e.g. Network Termination Points, distribution frames, risers, telecommunications rooms, and lead-in ducts.

MDU (Multi-dwelling Unit) refers to any development of two or more Units that are joined by a common wall or property boundary. Examples of MDUs include apartments, office buildings, town houses, retail and commercial premises, shopping malls and the like. An MDU may consist of multiple towers that are part of a common main building.

Network Termination Point (NT) is the point at which the In-building Physical Infrastructure of a building unit terminates. A building unit may have multiple NTs.

New Development means the development of real estates, especially the preparation of a new site for residential, commercial, industrial or governmental or any other special purpose or mixed use..

Outside Plant (OSP), within a New Development, refers to all of the Passive Network Components, and any associated hardware, located between a central distribution point at the border of the New Development and Access Points.

Passive Network Components include all the non-electric physical elements, such as buildings, sites, ducts, towers and masts, manholes, hand-holes, and cables, among others, that may serve for the provision of In-building and Outside Plant Telecommunications Networks.

Riser Area means the physical location containing the vertical ducts and distribution cabling that connects each floor with the BDF.

SDU (Single-dwelling Unit) means a structure that contains only one Unit (residence / office / commercial premise).

Telecommunications Room is an enclosed architectural space designed to contain telecommunications equipment, cable terminations, and a Building Distribution Frame (BDF). This room is also used as a collocation area to house various equipment and cables used to distribute telecommunication, image and security services to each Unit.

Unit means town house, residential apartment, office space, or any other closed entity within a building.

Unit Distributor (UD) means a physical element in a MDU, located between the BDF or the FD and the Termination Points (NT) located in the Unit, which concentrates all cables in the Unit.

3 Configuration

a) Construction of a new MDU provides an opportunity to incorporate a High-speed-ready broadband infrastructure at relatively low cost. The installations of such infrastructure have to be done in three areas: access area, riser area and the office/housing area. For a smooth implementation, the following infrastructure elements shall be taken into account at the planning stage of the building:

- Access Point
- Access Area
- Telecommunications Room
- Riser Area
- Floor Distributor

3.1 Reference Configuration

a) The following figure shows the reference configuration for In-building Physical Infrastructure (based on ISO/IEC 11 801).

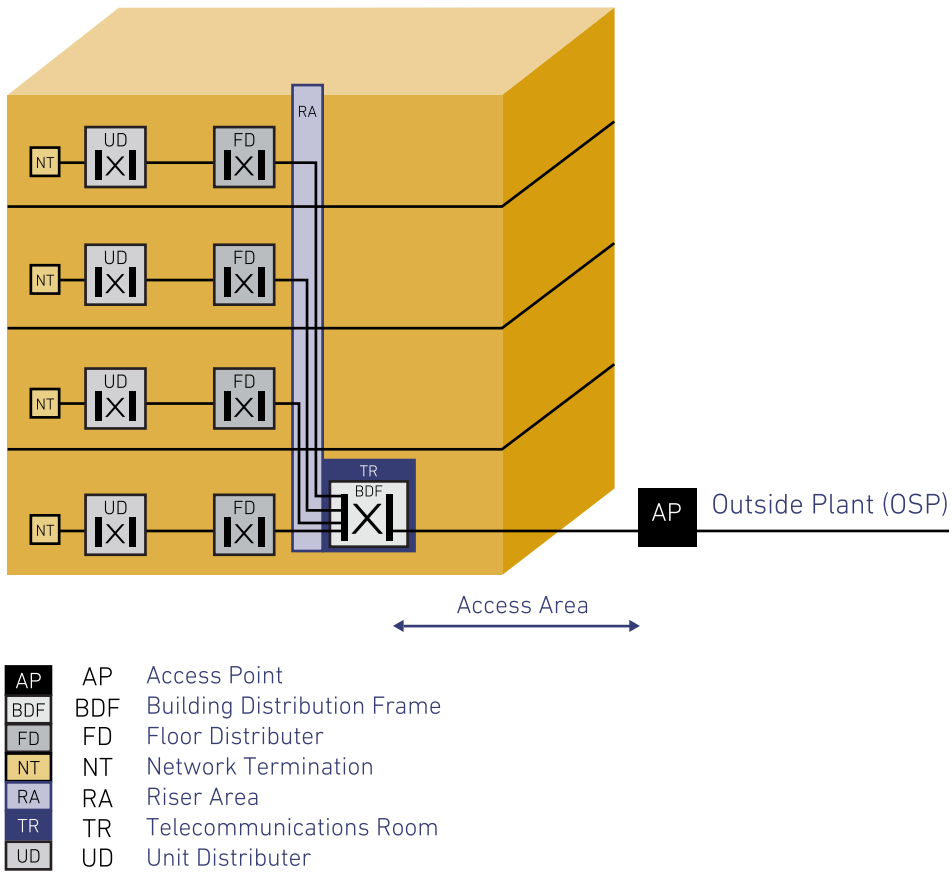

Figure 1: Reference configuration for In-building Physical Infrastructure

b) There shall be one sole Access Point per MDU, which is accessible to FBPs. The Access Point is the demarcation point between Outside Plant and In-building Physical Infrastructure. The Access Point is connected to the Telecommunications Room through two or more lead-in duct(s).

c) Each building in a New Development shall be equipped with a Telecommunications Room. This room includes the BDF, where - via the Access area and the lead in ducts / cables - the outside and inside cabling is mounted. In addition the Telecommunications Room serves as collocation area for equipment required by FBPs. This equipment is also connected to the BDF. The BDF allows connections between cabling coming from outside of the building with the inside cabling and collocated equipment.

d) In MDUs a vertical riser area shall be provided between BDF and each floor. Each floor may contain a Floor Distributor to connect between vertical and horizontal cabling. Each Unit is equipped with one or more Network Terminations, which are connected to the Unit Distributor. The Unit Distributor is then connected to the Floor Distributor.

3.2 Options for the Internal Cabling

The reference configuration allows for two options of the internal cabling.

3.2.1 Floor Distributor Topology

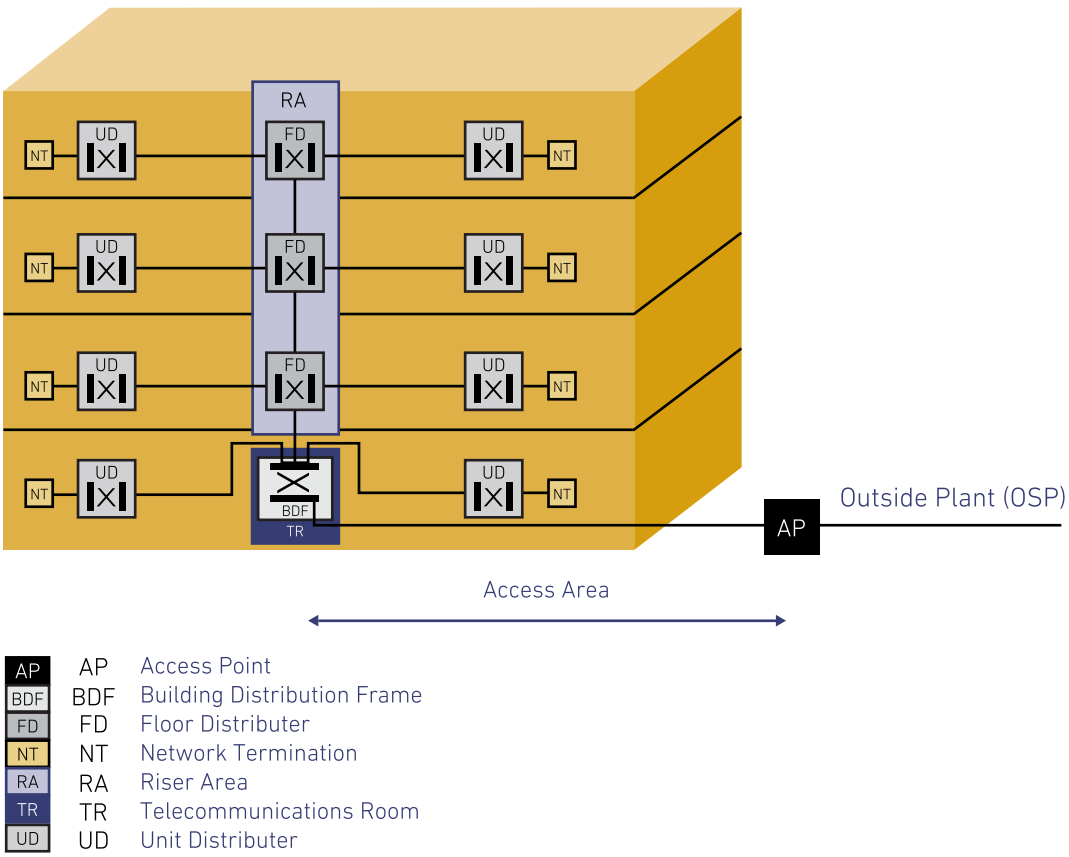

Figure 2: Option 1 – Floor distributor topology configuration for In-building Physical Infrastructure

a) The floor distributor topology represents the reference configuration. It is the preferred solution for MDU. A floor distributor is installed in each floor of the building. Each Unit Distributor connects directly to the floor distributor that is connected to the Building Distributor.

b) The Floor Distributor topology is normally used for buildings with more than 10 Units as it limits cable lengths and capacity in the riser area.

c) The Floor Distributors allow for higher flexibility of the In-building Physical Infrastructure. Further, this configuration potentially reduces the length of the cables as connections between Floor Distributors are possible. On the other hand, it requires additional investments for infrastructure elements (Floor Distributors). Further, Floor Distributors represent a potential source of faults.

3.2.2 Star topology

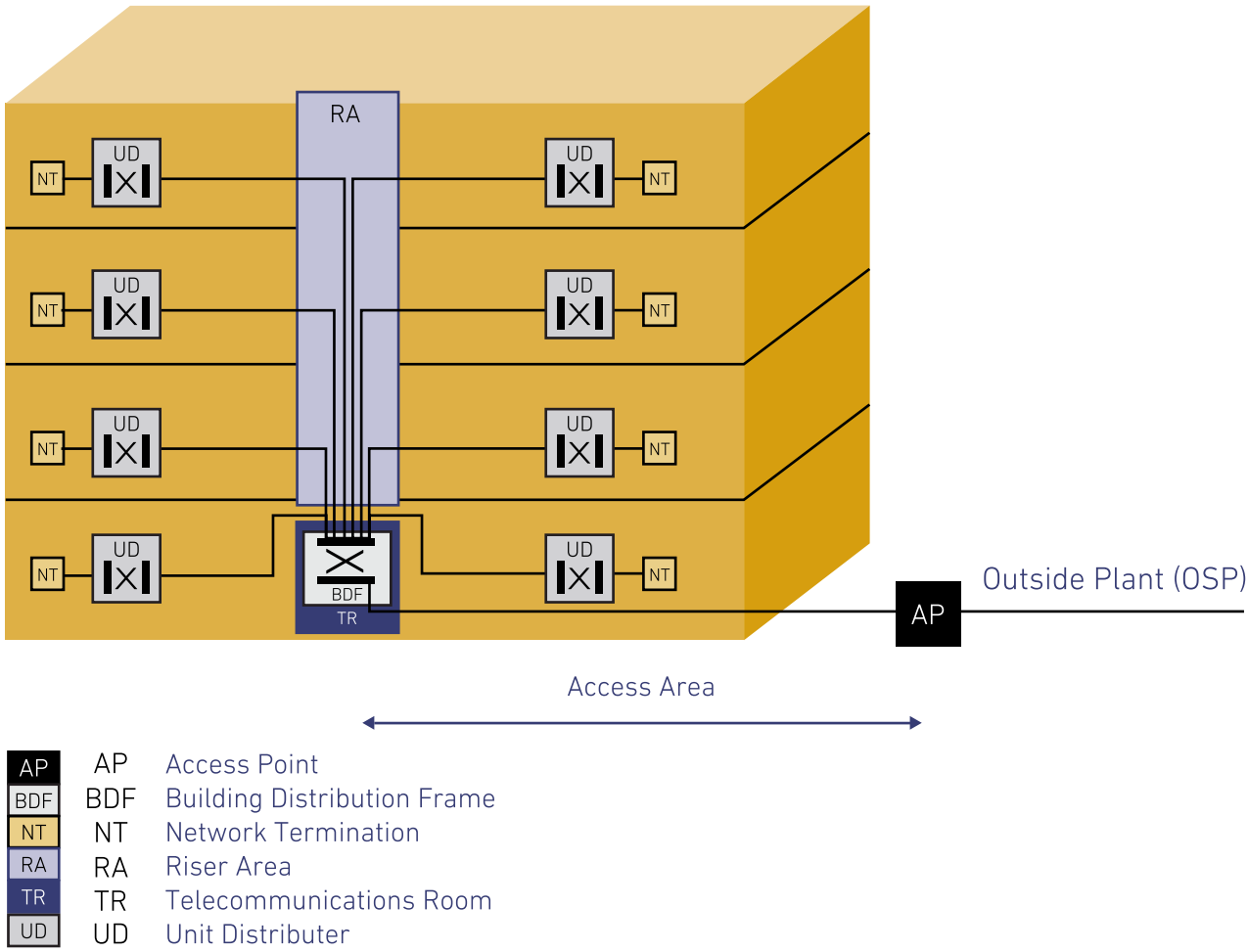

Figure 3: Option 2 – Star topology configuration for In-building Physical Infrastructure

a) The star topology deviates from the reference configuration as it lacks a Floor Distributor. Each Unit Distributor connects directly to the Building Distributor Frame.

b) Such configuration is normally used for up to 10 Units in a building as it requires longer cable lengths and considerable capacity in the riser area.

c) The advantage of star topology configuration lies in the elimination of the interface of the floor distributer. Such configuration saves costs and reduces sources of error (floor distributer). On the other hand, the riser area must be capable of accommodating larger conduits, sleeves, etc. as more cables are needed.

4 Main Requirements

4.1 General Requirements

a) All MDU shall be equipped with a High-speed-ready In-building Physical Infrastructure, from the Access Point up to the NTs. Planning and design of the In-building Physical Infrastructure shall be executed by Persons specialized in such planning and design.

b) In-building Physical Infrastructure in MDU shall be future-proof.

c) It is highly recommended that only components that have been tested and accepted by internationally accredited and recognized Laboratories are used.

d) In-building Physical Infrastructure shall have capacity to provide at least four connections per Unit.

4.2 Specific Requirements for Mobile Services

a) In-building Physical Infrastructure shall also be used to facilitate mobile network coverage. This can be achieved in two different ways:

1. A building (especially a high rise building) can serve as a location for antennas. In this case a fiber connection is required between the Access Point and the antenna. It is recommended to coordinate at the planning stage with mobile Service Providers to identify whether a building is suitable as an antenna location. In this case a Network Termination at the antenna shall be made available according to the requirement of the mobile Service Provider(s).

2. To facilitate good indoor coverage for mobile services, repeaters may be installed within the building. In this case early coordination with mobile operators is useful to identify the proper locations for such repeaters.

5 Specific Requirements for In-building Infrastructure Elements

5.1 Internal Cabling

a) The internal cabling shall be based on international standard ISO/IEC 11801 Edition 2.2.

b) Fiber Optic Cable (FOC) shall preferably be used for internal cabling. If twisted pair copper cable is used, the internal cabling shall at least conform to Category 6 in accordance with ISO/IEC TR 11801 Edition 2.2 [1] . Category 8 in accordance with ISO/IEC TR 11801 Edi-

[1] International Standard ISO/IEC 11801: Information technology – Generic cabling for customer premises

tion 2.2 shall be the preferred solution.

c) Splicing of FOC shall be avoided. Splice attenuation shall not exceed 0,15 dB, and be typically at 0,01 dB. Return loss shall not be measurable.

d) For FOC, either SC/APC connectors (IEC 61754-4) or LC/APC connectors (IEC 61754-20) shall be used.

e) The dimensioning of the In-building Physical Infrastructure shall be according to the number of units in the building and the associated number of connections (4 per unit) including a suitable reserve capacity.

f) The In-building Physical Infrastructure shall be designed to meet the projected service requirements at the floor level and shall have built-in flexibility to meet the growing needs of tenants.

5.1.1 Bend Radius

a) The internal cabling shall take into account the specified minimum bend radii for the respective cables used.

b) The bend radii are defined in ITU-T G657 A1/A2/B2/B3. The minimum bend radius ranges from A1 at 10 mm to B3 at 5 mm.

c) The smaller the radius the higher the bending loss. Thus, bigger radii shall be preferred.

5.2 Access Point

The Access Point is the demarcation between Outside Plant and In-building Physical Infrastructure (see Article 3). The Access Point shall be easily accessible for FPBs but also protected against potential damage. The Access Point must be able to accommodate at least 4 connections per unit in the building. The Access Point is to be provided by the Land Developer.

5.3 Lead-in Duct

a) The cables that connect the Access Point to the Telecommunications Room must be protected. Therefore, lead-in ducts must be provided by the Developer of the Building from the Access Point to the Telecommunications Room.

b) Lead-in ducts shall be laid at a depth of about 300-600 mm and protected against damage, depending on local municipal rules.

c) The lead-in ducts shall meet the following functional requirements:

- At least one (1) [plus one (1) reserve] lead in-duct(s) shall be installed per building. Duct systems with subducts shall be used.
- The inner diameter of each lead-in (sub-)duct shall be at least 20 mm.
- For MDUs with more than 20 units at least 50 mm (sub-)ducts shall be used.
- The ducts shall be sealed at each end.

- The location of lead-in ducts shall be clearly marked above ground for ease of locating.
- Lead-in ducts shall be assigned exclusively for Telecommunications Services.

Duct Type	Lead-in
Minimum Dimension (inner diameter)	[SDU and MDU < 20 units: 20 mm MDU > 20 units: 50 mm]
Quantity	min 1 (+1 reserve)
Thickness (mm)	+/-2,00 +/-3,25

d) A continuous and strong draw rope shall be installed in the (sub-)ducts and shall remain for additional cable installations.

5.4 Telecommunications Room

a) Each MDU tower with more than 20 units shall be equipped with a Telecommunications Room. Multiple Telecommunications Rooms shall be interconnected by separate cable trays (200 mm x 50 mm) or equivalent.

b) The Telecommunications Room shall meet the following requirements:

- Good lighting, proper ventilation and air circulation.
- 24/7 access for FBP staff.
- Properly accessible for adding or removing equipment and tools.
- Master lock for the entrance door.
- No windows.
- Dedicated spaces not shared with other functions (such as electrical or mechanical).
- Air conditioned to maintain the temperature at 25 °C ± 10 °C; with humidity 40%-60%.
- All metal parts must be earth bonded with resistance of less than 1 ohm.
- Extra space for future network equipment additions.
- Space for collocating equipment of at least three FBPs, with a minimum of two square eters for each FBP.
- Power supply with at least 10 A/C sockets (240 volt, 20 amp) with a dedicated circuit breaker.
- A raised floor system is recommended.

c) In an MDU with less than 20 Units the installation of a separate Telecommunications Room may not be economical. In this case telecommunications space shall be provided to accommodate the Building Distribution Frame and other equipment. This space can be collocated with technical equipment for other utility infrastructures with proper clearance between different infrastructures.

d) MDU with more than 40 floors above ground shall have a roof-top Telecommunications Room in addition.

5.5 Building Distribution Frame (BDF)

The Building Distribution Frame allows arbitrary connections between in-building cabling and outside / collocation cabling. The BDF shall have sufficient space to accommodate 4 connections to each unit.

5.6 Riser Area

a) A riser area shall be provided for all multi-storied buildings. The riser area shall be able to accommodate at least 4 connections to each unit. 15 % reserve capacity in the riser area shall be provided for manipulation purposes.

b) Any cables that are installed in the riser area shall be easily replaceable in case of damage or faults. Cables shall be placed in cable risers, conduits, sleeves, tubes, etc.

c) The following principles shall apply:

- Riser areas shall be accessible at any time.
- The installations shall be done using the shortest route and preferably as vertical as possible.
- Riser areas shall not be located inside units or air shafts.
- For MDUs two conduit pipes shall be installed that reach from the basement to the rooftop.
- For every 4 floors of a building, 2 conduit pipes shall be installed.
- The diameter of the conduit pipes shall be at minimum 25 mm.

5.7 Floor Distributor

a) Floor Distributors shall be located close to the riser area. Floor Distributors shall be installed at a minimum height of 600 mm from finished floor level.

b) In general, a floor distributor should not require active elements.

c) In case active elements are required, a power supply must be provided.

d) Each Unit of a floor shall be connected with a 20 mm conduit pipe with the Floor Distributor.

e) A star topology shall be used for the cabling on each floor. Looping of the horizontal cabling from Unit to Unit is prohibited.

5.8 Unit Distributor

a) Each Unit (dwelling or office) shall have a Unit Distributor installed at a central and accessible location in case more than one NT is installed in the Unit. The Unit Distributor shall connect each NT with a conduit pipe of 20 mm. It shall be located where the distance to the farthest NT within the Unit does not exceed 90 meters.

b) The Unit Distributor shall have a standard power supply.

c) The conduit pipes and the Unit Distributor shall be able to handle all possible cables:

- Coaxial cables (75 Ohm resistance)
- Twisted pair Ethernet cables
- Fiber cables (G657.A1/A2)

5.9 Network Termination

a) Each Unit shall have at least 4 connections to the BDF.

b) Each residential room (except the wet rooms such as: bathrooms and laundry rooms) or office room shall be equipped with at least one Network Termination (NT).

5.10 Installations

a) Installations shall be executed by qualified personnel only according to manufacturers' specifications using the proper tools and testing equipment to ensure quality, high performance of the system and that it meets expected standards.

b) Cables for information and communications technologies (ICT) shall be installed separately from electrical cabling. When installing ICT infrastructure in parallel to other installations, all regulations regarding noise protection, fire protection, or the security of electrical installations must be followed.

c) All materials shall be flame retardant, low smoke and zero halogen emissions.

5.11 Testing

a) The testing for FOC must conform to ISO/IEC TR 14763-3.

b) The testing for balanced cabling installations (CAT6 etc.) must conform to IEC 61935-1.

5.12 Documentation

a) All infrastructure components must be clearly and uniquely labeled. Labels on components must match the label in the documentation and as-built drawings.

b) The building records shall include the following:

- Building location information (e.g. building number and way number).
- A list of all NT's and their locations in the building.
- A list of all distributors and the connections.

- Labeling of all infrastructure components.
- Contact information.
- As-built drawings.

c) All above documents must be kept in the Telecommunications Room / Space.

d) The above documents must be updated as soon as changes to the building records have occurred.

Annex B - 2

Technical Standards for In-building Physical Infrastructure (IPI) for Single Dwelling Units

Page	Contents	
17	Purpose and Scope	1
17	Purpose	1.1
17	Scope	1.2
17	Definitions	2
18	Reference Configuration	3
20	General Requirements	4
20	Specific Requirements for In-building Infrastructure Elements	5
20	Internal Cabling	5.1
20	Bend Radius	5.1.1
20	Access Point	5.2
21	Lead-in Duct	5.3
22	Telecommunications Space	5.4
22	Unit Distributor	5.5
22	Floor Distributor	5.6
23	Network Termination	5.7
23	Installations	5.8
23	Testing	5.9
23	Documentation	5.10

1 Purpose and Scope

1.1 Purpose

This document provides the technical standards for In-building Physical Infrastructure for Single Dwelling Units (SDU) to enable all Building Developers and Facilities based Service Providers to design and deploy their telecommunications network infrastructure in public and private SDUs.

These standards have been established with the aim to ensure that any In-building Physical Infrastructure in a SDU is built in accordance with a common national telecommunication standard and meets international best practice.

1.2 Scope

These standards apply to all new Single Dwelling Unit buildings (residential, commercial, industrial, governmental, etc.). They apply to all In-building Physical Infrastructure and include the most commonly used materials specifications for In-building Physical Infrastructure.

These standards shall be observed by Building Developers and FBPs.

These standards do not change any obligations imposed by other administrative authorities. Installations in buildings shall strictly meet the requirements set by the relevant authorities having jurisdiction. Thus, the installations shall comply with all provisions, rules and guidelines established by these authorities.

2 Definitions

Access Point means a physical location, located outside the building, accessible to Facilities' based Service Providers (FBPs), where connection to the In-building Physical Infrastructure is made available. It is part of the Outside Plant and it is the demarcation point between Outside Plant and In-building Physical Infrastructure.

Access Area means the physical location containing the lead-in ducts and cabling from the Access Point to the Telecommunications room.

Developer means a Person who develops real estate, especially by preparing a site for residential, commercial, industrial or governmental or any other special purpose or mixed use (Land Developer). A Developer may also engage in the construction of buildings on such real estate (Building Developer). Often, the owner of the real estate is also the Developer. He is responsible for observing building regulations for construction and land development works.

Floor Distributor (FD) means a sub-dividing element between the BDF and the Unit Distributor / Network Termination Points located nearby or in the riser area which allows the transition from the vertical to the horizontal indoor cable. Use of Floor Distributors is optional.

High-speed-ready means OSP and In-building Physical Infrastructure that hosts all necessary passive network elements that enable the delivery of high-speed electronic Telecommunications Networks. High-speed means an access connection with a minimum download speed of 100 Mbit/s, and with a 1 Gbit/s download speed eventually attainable.

In-building Physical Infrastructure (IPI) means Passive Network Components in a building connecting the Access Point with the Network Termination Points in the building units (also known as Inside Plant). In-building Physical Infrastructure comprises e.g. Network Termination Points, distribution frames, risers, telecommunications rooms, and lead-in ducts.

Network Termination Point (NT) is the point at which the In-building Physical Infrastructure of a building unit terminates. A building unit may have multiple NTs.

New Development means the development of real estates, especially the preparation of a new site for residential, commercial, industrial or governmental or any other special purpose or mixed use.

Outside Plant (OSP), within a New Development, refers to all of the Passive Network Components, and any associated hardware, located between a central distribution point at the border of the New Development and Access Points.

Passive Network Components include all the non-electric physical elements, such as buildings, sites, ducts, towers and masts, manholes, hand-holes, and cables, among others, that may serve for the provision of In-building and Outside Plant Telecommunications Networks.

Riser Area means the physical location containing the vertical ducts and distribution cabling that connects each floor with the BDF.

SDU (Single-dwelling Unit) means a structure that contains only one living unit / office / commercial premise.

Telecommunications Space is space designed to contain telecommunications equipment of different FBPs, cable terminations, and distribution frames. As various equipment and cables that are used to distribute telecommunication, image distribution and security services to each dwelling Unit are often installed in the Telecommunications Space. The Telecommunications Space may also include other infrastructure.

Unit means town house, residential apartment, office space, or any other closed entity within a building.

Unit Distributor (UD) means an element in a MDU, located between the BDF or the FD and the Termination Points (NT) located in the Unit, which concentrates all cables in the Unit.

3 Reference Configuration

a) Construction of a new SDU provides an opportunity to incorporate a High-speed-ready broadband infrastructure at relatively low cost. The installations of such infrastructure have to be done in three areas: access area, riser area and the office/housing area. For a smooth implementation, the following infrastructure elements shall be taken into account at the planning stage of the building:

- Access point
- Access area
- Telecommunications Space (containing the UD)
- Riser area

d) The following figure shows the reference configuration for In-building Physical Infrastructure (based on ISO/IEC 11 801).

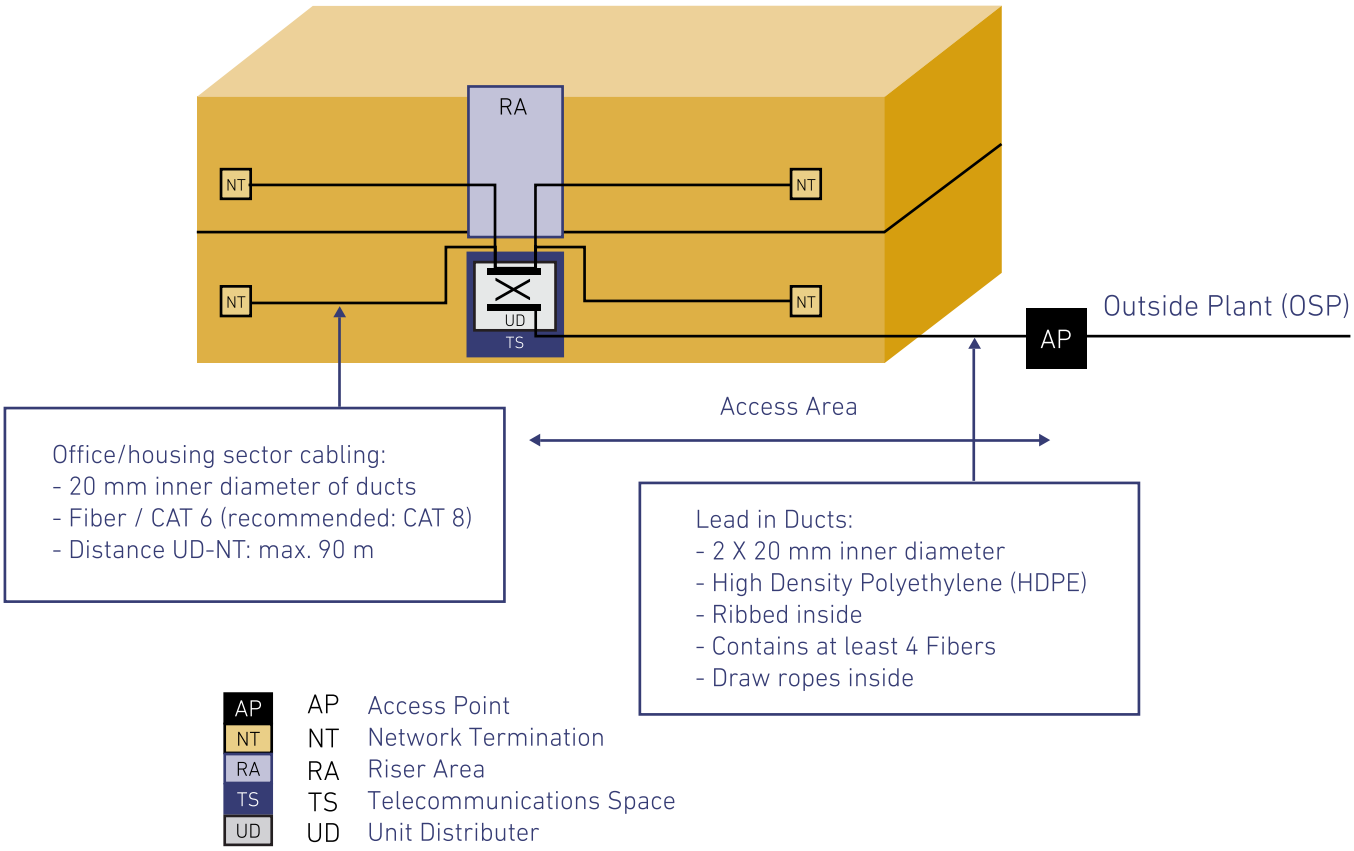

Figure 4: Reference configuration for In-building Physical Infrastructure

e) There shall be one Access Point per SDU, which is accessible to FBPs. The Access Point is the demarcation point between Outside Plant and In-building Physical Infrastructure. The Access Point is connected to the Telecommunications Space through two or more lead-in duct(s).

f) The SDU shall be equipped with a Telecommunications Space. This space includes the UD, where via the Access area and the lead in ducts / cables the outside and inside cabling is mounted. In addition the Telecommunications Space serves as collocation area for equipment required by FBPs. This equipment is also connected to the UD. The UD allows connections between cabling coming from outside of the building with the inside cabling and equipment from FBPs.

g) Each Unit is equipped with one or more Network Terminations, which are connected to the Unit Distributor.

h) The internal cabling shall be a star configuration where all cables directly terminate at the UD. The advantage of star topology configuration lies in the elimination of the interface of the Floor Distributer. Such configuration reduces sources of error.

4 General Requirements

a) All SDU shall be equipped with a High-speed-ready In-building Physical Infrastructure, from the Access Point up to the NTs. Planning and design of the In-building Physical Infrastructure shall be executed by Persons specialized in such planning and design.

b) In-building Physical Infrastructure in SDUs shall be future-proof.

c) It is highly recommended that only components that have been tested and accepted by internationally accredited and recognized Laboratories are used.

d) In-building Physical Infrastructure shall have capacity to provide at least four connections per building unit.

5 Specific Requirements for In-building Infrastructure Elements

5.1 Internal Cabling

a) The internal cabling shall be based on international standard ISO/IEC 11801 Edition 2.2.

b) Fibre Optical Cables (FOC) shall preferably be used for internal cabling. If twisted pair copper cable is used, the internal cabling shall at least conform to Category 6 in accordance with ISO/IEC TR 11801 Edition 2.2. Category 8 in accordance with ISO/IEC TR 11801 Edition 2.2 [2] shall be the preferred solution.

c) Splicing of FOC shall be avoided. Splice attenuation shall not exceed 0,15 dB, and be typically at 0,01 dB. Return loss shall not be measurable.

d) For FOC, either SC/APC connectors (IEC 61754-4) or LC/APC connectors (IEC 61754-20) shall be used.

e) From the Access Point to the UD, at least four (4) connections (fibers, twisted pair copper cables) shall be installed.

f) The In-building Physical Infrastructure shall be designed to meet the projected service requirements at the floor level and shall have built-in flexibility to meet the growing needs of occupants.

5.1.1 Bend Radius

a) The internal cabling shall take into account the specified minimum bend radii for the respective cable in use.

b) The bend radii are defined in ITU-T G657 A1/A2/B2/B3. The minimum bend radius ranges from A1 at 10 mm to B3 at 5 mm.

c) The smaller the radius the higher the bending loss. Thus, bigger radii shall be preferred.

5.2 Access Point

a) The Access Point is the demarcation between Outside Plant and In-building Physical Infrastructure (see Article 3). The Access Point shall be easily accessible for FPBs but also protected against potential damage. The Access Point must be able to accommodate at least 4 connections to the SDU. The Access

[2] International Standard ISO/IEC 11801: Information technology – Generic cabling for customer premises

Point is to be provided by the Land Developer. Building Developers shall provide appropriate space inside the wall that the Access Point can be mounted flush to the wall.

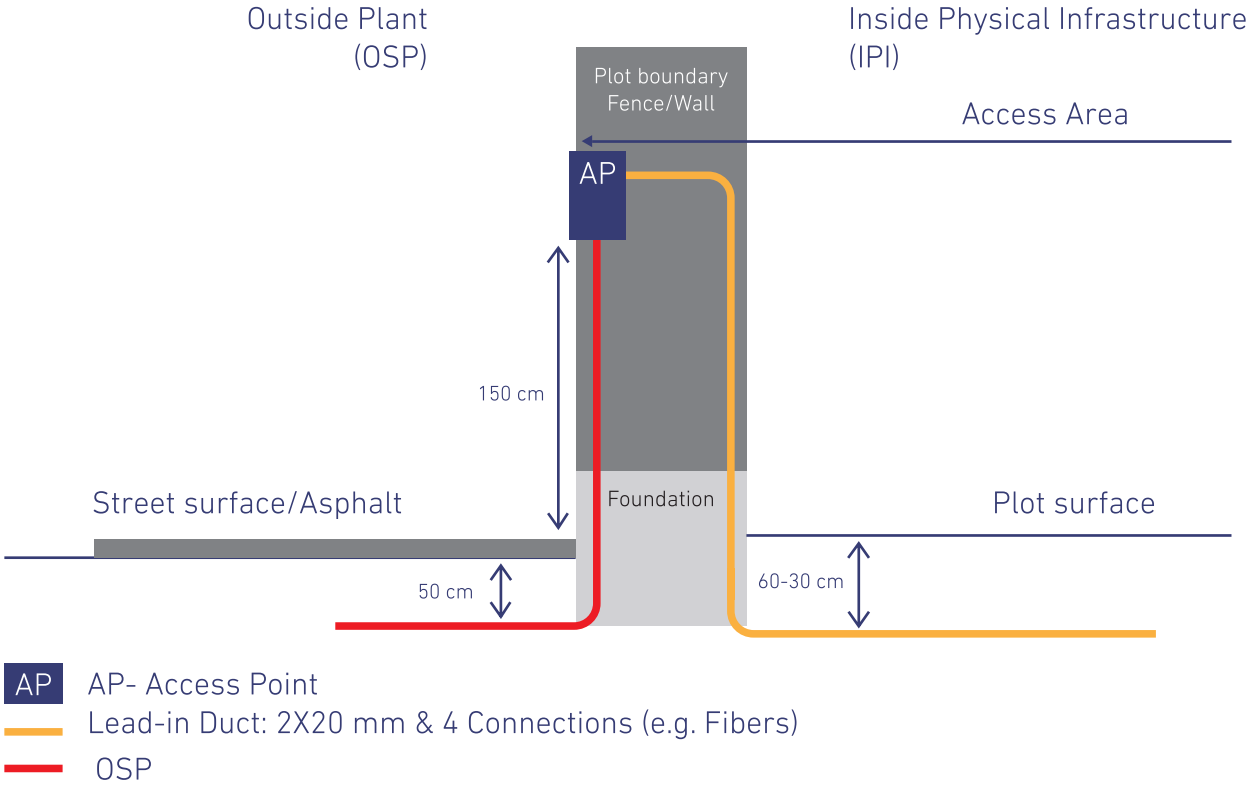

Figure 6: Access Point with Lead-in Duct

5.3 Lead-in Duct

a) The cables that connect the Access Point to the Telecommunications Space must be protected. Therefore, lead-in ducts should be provided by the Developer of the Building from the Access Point to the Telecommunications Space.

b) Lead-in ducts shall be laid at a depth of about 300-600 mm and protected against damage, depending on local municipal rules.

c) The lead-in ducts shall meet the following functional requirements:

- At least one (1) [plus one (1) reserve] lead in-duct(s) shall be installed.
- The inner diameter of each lead-in duct shall be at least 20 mm.

- The ducts shall be sealed at each end.
- The location of lead-in ducts shall be clearly marked above ground for ease of locating.
- Lead-in ducts shall be assigned exclusively for Telecommunications Services.

d) A continuous and strong draw rope shall be installed in the ducts and shall remain for additional cable installations.

5.4 Telecommunications Space

a) The Telecommunications Space shall meet the following requirements:

- Central and accessible location. It shall be located where the distance to the farthest NT within the Unit does not exceed 90 meters.
- Good lighting, proper ventilation and air circulation.
- Space of 60 x 60 cm.
- All metal parts must be earth bonded with resistance of less than 1 ohm.
- Space for collocating equipment of at least three FBPs.
- Power supply (240 volt).

b) The space can be nearby technical equipment for other utility infrastructures with proper clearance between different infrastructures.

5.5 Unit Distributor

a) The Unit Distributor shall be installed at the Telecommunications Space in case more than one NT is installed in the Unit. The Unit Distributor shall connect each NT with a conduit pipe of 20 mm.

b) The conduit pipes and the Unit Distributor shall be able to handle all possible cables:

- Coaxial cables (75 Ohm resistance)
- Twisted pair Ethernet cables
- Fiber cables (G657.A1/A2)

5.6 Floor Distributor

a) Floor distributors may be located on the second floor of a SDU. Floor Distributors shall be installed at a minimum height of. 600 mm from finished floor level.

b) In general, a floor distributor should not require active elements.

c) In case active elements are required, a power supply must be provided.

d) Each room of a floor shall be connected with a 20 mm conduit pipe with the Floor Distributor.

e) A star topology shall be used for the cabling on each floor. Looping of the horizontal cabling from room to room shall be avoided.

5.7 Network Termination

a) Each residential room (except the wet rooms such as: bathrooms and laundry rooms) or office room shall be equipped with at least one Network Termination (NT).

5.8 Installations

a) Installations shall be executed by qualified personnel only according to manufacturers' specifications using the proper tools and testing equipment to ensure quality, high performance of the system and that it meets expected standards.

b) Cables for information and communications technologies (ICT) shall be installed separately from electrical cabling. When installing ICT infrastructure in parallel to other installations, all regulations regarding noise protection, fire protection, or the security of electrical installations must be followed.

c) All materials shall be flame retardant, low smoke and zero halogen emission.

5.9 Testing

a) The testing for FOC must conform to ISO/IEC TR 14763-3.

b) The testing for balanced cabling installations (CAT6 etc.) must conform to IEC 61935-1.

5.10 Documentation

a) All infrastructure components shall be clearly and uniquely labeled. Labels on components must match the label in the documentation and as-built drawings.

b) The building records shall include the following:

- Building location information (e.g. building number and way number).
- A list of all NT's and their locations in the building.
- A list of all distributors and the connections.
- Labeling of all infrastructure components.
- Contact information.
- As-built drawings.

c) All above documents shall be kept in the Telecommunications Space.

d) The above documents shall be updated as soon as changes to the building records have occurred.

هيئة الاتصالات وتقنية المعلومات السعودية
www.citc.gov.sa info@citc.gov.sa
199099 0114618000