الاتصالات السعودية
SAUDI TELECOM

SAUDI TELECOM COMPANY

Reference Offer for Data Access (RODA)

Annex C, Attachment 1

BIT STREAM ADSL
CPE SPECIFICATIONS

TABLE OF CONTENTS

1. INTRODUCTION 3

2. CHARACTERISTICS OF SPLITTERS 6

3. CHARACTERISTICS OF ADSL MODEM 7

4. WIRING OPTIONS 8

Bit Stream ADSL CPE Specifications

1. INTRODUCTION

1.1 The Customer Premises Equipment (CPE) including the Splitters, ADSL Modem, Micro filters, etc, must be interoperable with existing PSTN and DSLAM equipment.

1.2 This document provides the Technical Specifications for the CPE and the interfaces used to provide the ADSL service in the Kingdom.

International Standards for ADSL shall support standards:

1. Asymmetric Digital Subscriber Lines (ADSL G.dmt) (ITU G.992.1)(G.dmt)
2. Asymmetric Digital Subscriber Lines (ADSL2) (ITU G.992.3)[1]
3. Asymmetric Digital Subscriber Lines (ADSL2+) (ITU G.992.5)[1]
4. ETSI TR 101 728
5. ETSI TR 101 952-1-5V1.1.1 (2003-05)

[1] Developments in ADSL technology such as ADSL 2 and ADSL2+ can extend the range of delivered bandwidth over copper loops. These technologies are not addressed by this STC RODA at this time but STC is committed to meeting its wholesale customer requirements and they will, , be introduced into the STC network subject to testing and evaluation.

1.3 ADSL System Reference Model

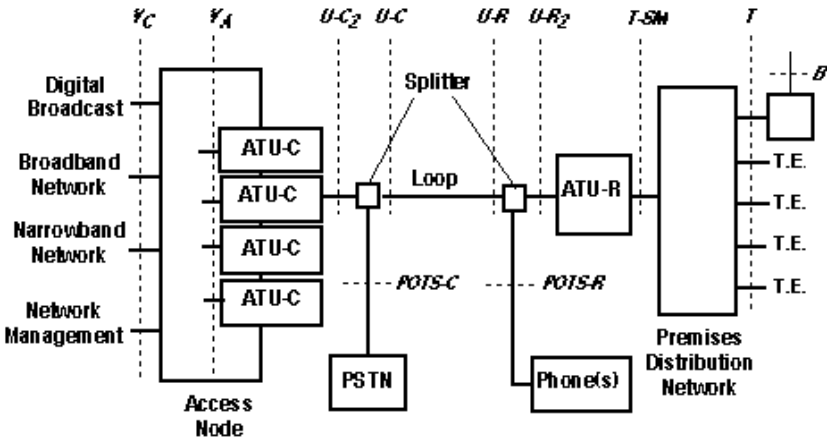

Figure 1

ATU-C: ADSL Transmission Unit at the network end. The ATU-C may be integrated within an Access Node.
ATU-R: ADSL transmission Unit at the customer premises end. The ATU-R may be integrated within an SM.
Access Node: Concentration point for Broadband and Narrowband data. The Access Node may be located at a Central Office or a remote site. Also, a remote Access Node may subtend from a central access node.
B: Auxiliary data input (such as a satellite feed) to Service Module (such as a Set Top Box).
T-SM: Interface between ATU-R and Premises Distribution Network. May be same as T when network is point-to-point passive wiring. An ATU-R may have more than one type of T-SM interface implemented (e.g., a T1/E1 connection and an Ethernet connection). The T-SM interface may be integrated within a Service Module.
T: Interface between Premises Distribution Network and Service Modules. May be same as T-SM when network is point-to-point passive wiring. Note that T interface may disappear at the physical level when ATU-R is integrated within a Service Module.
U-C: Interface between Loop and POTS Splitter on the network side. Defining both ends of the Loop interface separately arises because of the asymmetry of the signals on the line.
U-C_2: Interface between POTS splitter and ATU-C. Note that at present ANSI T1.413 does not define such an interface and separating the POTS splitter from the ATU-C presents some technical difficulties in standardizing the interface.
U-R: Interface between Loop and POTS Splitter on the premises side.
U-R_2: Interface between POTS splitter and ATU-R. Note that at present ANSI T1.413 does not define such an interface and separating the POTS splitter from the ATU-R presents some technical difficulties in standardizing the interface.

1.4 Potential users of ADSL will need the following:

- An ADSL modem (compatible with the one at the NSP's point of presence)
- A POTS splitter to separate voice and data transmissions (using full rate ADSL)
- A POTS - micro filter for each POTS device connected at a point on the line not yet passed the splitter.
-

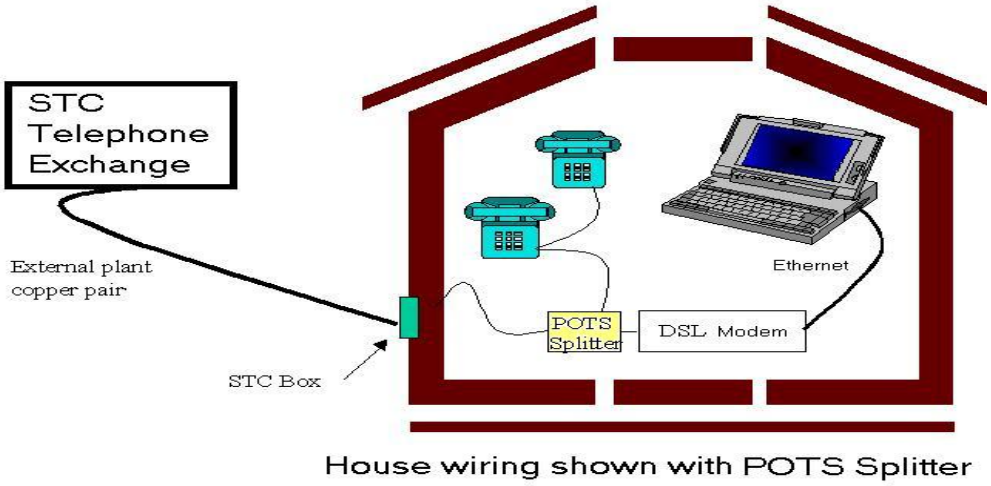

Figure 2. ADSL Main Components required in Customer Premises

A. Splitter / Micro-Filter
B. ADSL Modem
C. Network interface card
D. Ethernet Cable RJ45
E. Telephone Cable RJ11

2. CHARACTERISTICS OF SPLITTERS

2.1 The basic functionality of a Customer premises Plain Ordinary Telephone Service (POTS) Splitter is to separate the voice band and ADSL band data. The POTS splitter is located at the demarcation point of the customer Premises.

2.1.1 The POTS splitter shall comply with functional requirements as specified in ITU G.992.1 Annex E.1 Type European, ETSI TR 101 728, ETSI TS 101 952-1-5 V1.1.1 (2003-05) and ANSI T1E1.4.

2.1.2 The POTS and the high-speed DSL traffic shall co-exist on the same copper pair and meet the following requirements:

1. The splitter shall provide suppression of ADSL noise interference into the PSTN/POTS circuit as specified in ITU standard, ETSI and ANSI T1E1.4.
2. The POTS splitter shall provide suppression of POTS interference into the digital ADSL (full rate) stream in accordance with the procedure set down in ITU standard, ETSI and ANSI T1E1.4.

2.1.3 The failure of the POTS splitter shall not affect the POTS service.

2.1.4 The POTS splitter shall match the Terminal Balance Return Loss (TBRL) as specified in ITU-T Q.552. (Figure 11), when connected to the balance network given in Figure 1, above.

2.1.5 The inclusion of the Subscribers POTS splitters shall not introduce more than 1dB of insertion loss from 200Hz to 4kHz.

2.1.6 The Attenuation Frequency Distortion with the POTS splitter inserted in the copper line and terminated with the balance network and the input impedance in Figure 1 will be <1dB from 300 to 3.4kHz with respect to the insertion loss at 1kHz.

2.1.7 The Group Delay Distortion with the POTS splitter inserted in the copper line will be ≤200µs between 200Hz to 4kHz.

2.1.8 The POTS splitter shall transparently allow the following line feed arrangements:

1. -48V source fed through 2 x 250 Ω resistors.
2. Short circuit current limited to 55mA.
3. Power dissipation in on hook condition not exceeding 100mW per circuit.
4. 20MA constant source into loads between 120 Ω and 1200Ω.

2.1.9 The POTS splitter shall transparently allow Saudi Telecom's ringer currents and support a ringing load of 4 REN.

3. CHARACTERISTICS OF ADSL MODEM

3.1.1 The ADSL modem shall be interoperable and compatible with Alcatel chipset used in DSLAMs installed in STC network.

3.1.2 The ADSL modem shall be interoperable with STC PSTN switches line signalling.

3.1.3 All ADSL modem or connected computers should support PPPoE (rfc 2516).

3.1.4 The ADSL modem shall support DMT (Discrete Multi Tone) modulation technique.

3.1.5 The ADSL Modem should support ATM Forum UNI 3.0, 3.1 and 4.0 PVC.

3.1.6 The ADSL modem should support ATM traffic class UBR.

4. WIRING OPTIONS

4.1 RJ11 Interface

```
  v v     <-- Inside Most modems on inside pair
v | | v  <-- Outside Some on outside
| | | |
```

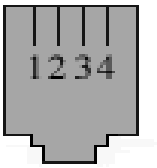

4.2 RJ45 Ethernet 10baseT Wiring options

The normal connection for an Ethernet cable is a T568B connection at each end. A cross over cable will have a T568A at one end and a T568B at the other at the other end.

Pin Number Designations for T568A

Colour Codes for T568A			
Pin	**colour**	**pair**	**name**
1	wh/grn	3	RecvData+
2	grn	3	RecvData-
3	wh/or	2	TxData +
4	blu	1	Unused
5	wh/blu	1	Unused
6	or	2	TxData -
7	wh/brn	4	Unused
8	brn	4	Unused

Pin Number Designations for T568B

EIA/TIA 568A

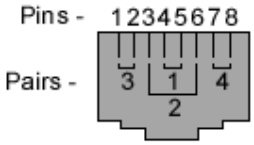

Pin Colors:
1 - White with green
2 - Green with white
3 - White with orange
4 - Blue with white
5 - White with blue
6 - Orange with white
7 - White with brown
8 - Brown with white

Colour Codes for T568B			
Pin	**colour**	**pair**	**name**
1	wh/or	2	TxData +
2	or	2	TxData -
3	wh/grn	3	RecvData+
4	blu	1	Unused
5	wh/blu	1	Unused
6	grn	3	RecvData-
7	wh/brn	4	Unused
8	brn	4	Unused

EIA/TIA 568B

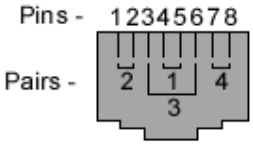

Pin Colors:
1 - White with orange
2 - Orange with white
3 - White with green
4 - Blue with white
5 - White with blue
6 - Green with white
7 - White with brown
8 - Brown with white